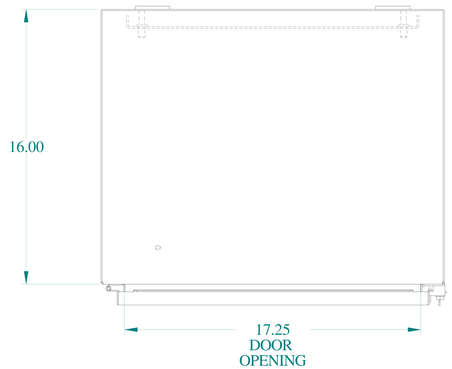

TOP VIEW

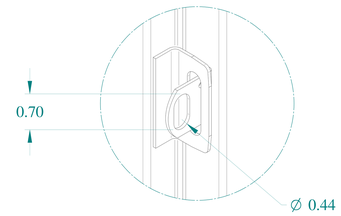

DETAIL Z

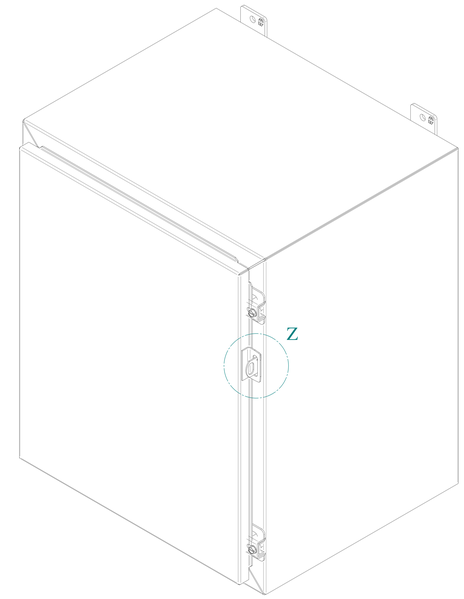

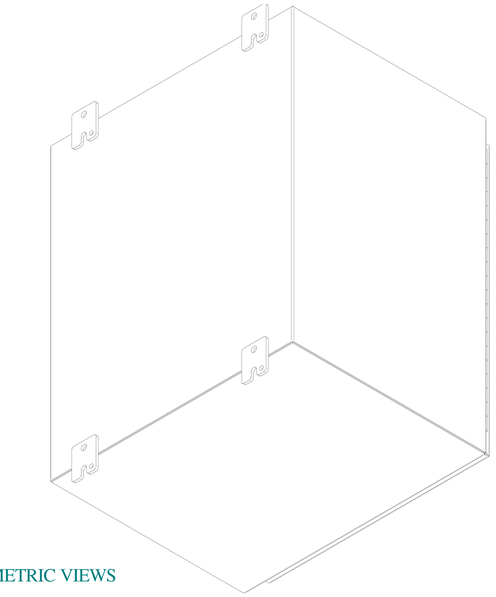

ISOMETRIC VIEWS

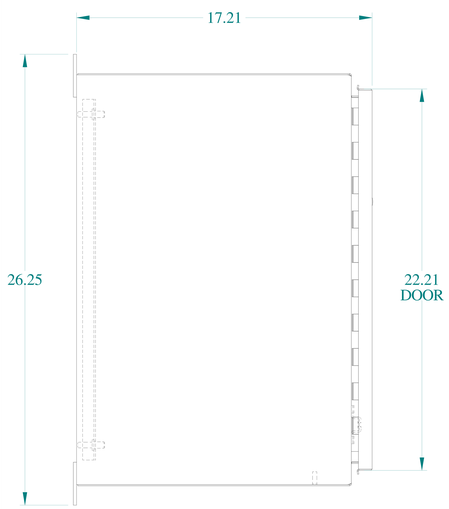

SIDE VIEW

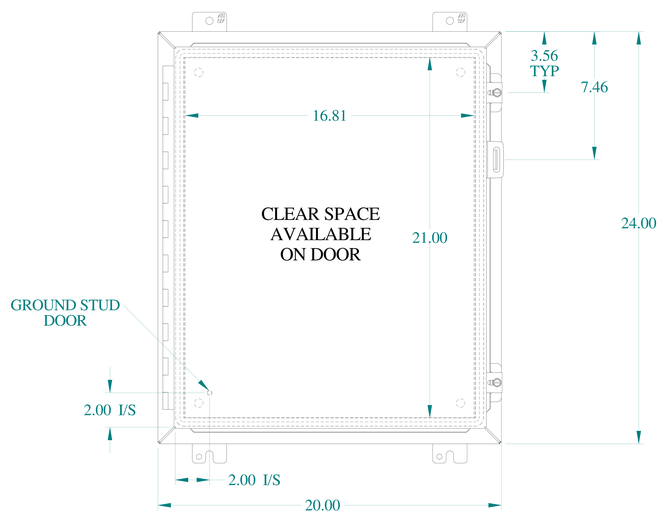

FRONT VIEW

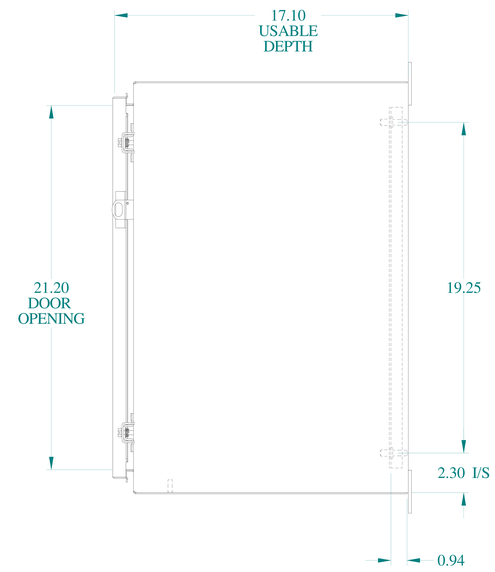

SIDE VIEW

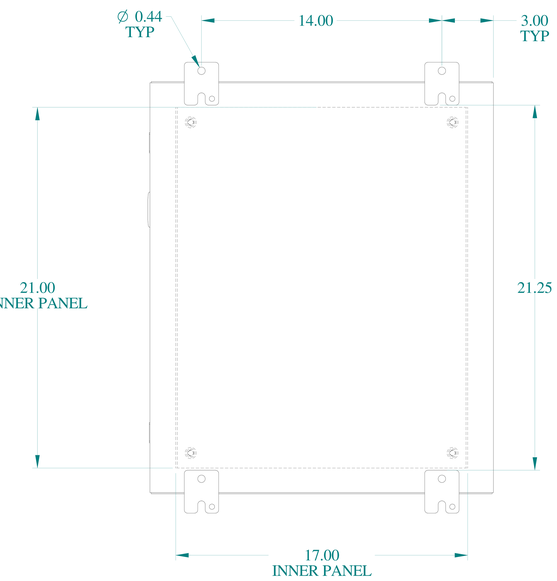

BACK VIEW

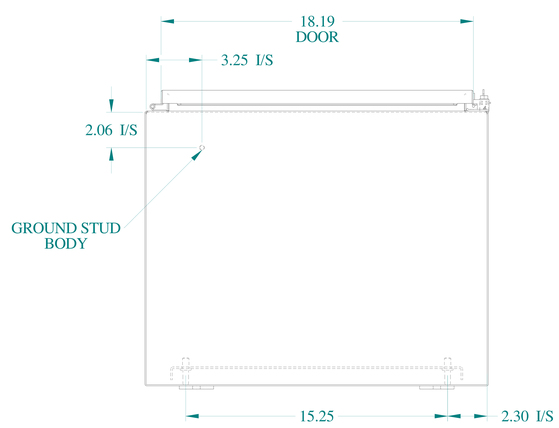

SIDE VIEW

HAMMOND MANUFACTURING®

www.hammondmfg.com

Data subject to change without notice.

Part # : 1418E16	Date : Mar. 24, 2019

Link:www.hammfg.com/1418E16