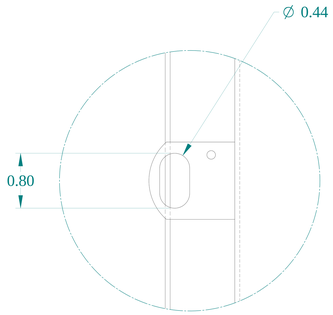

DETAIL Z

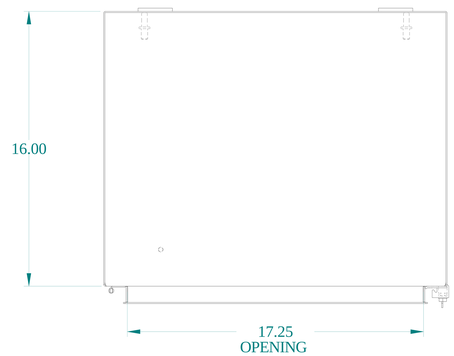

TOP VIEW
(DOOR REMOVED)

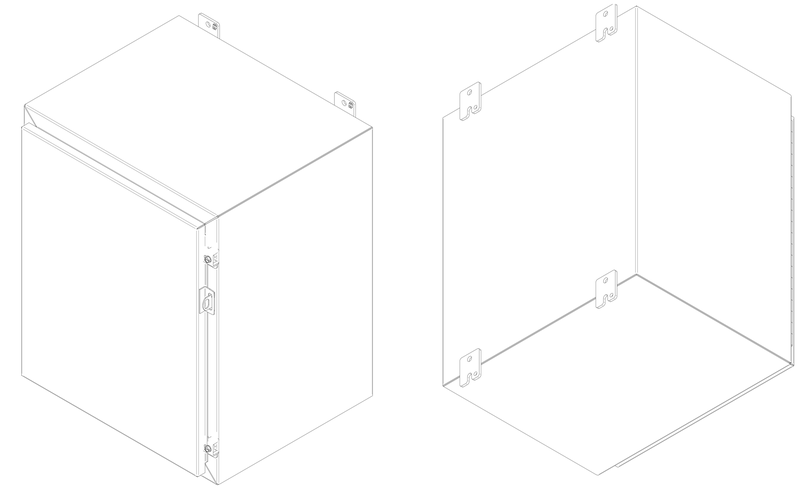

ISOMETRIC VIEWS

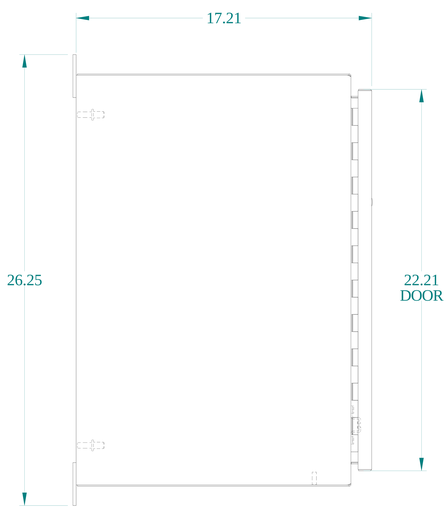

SIDE VIEW

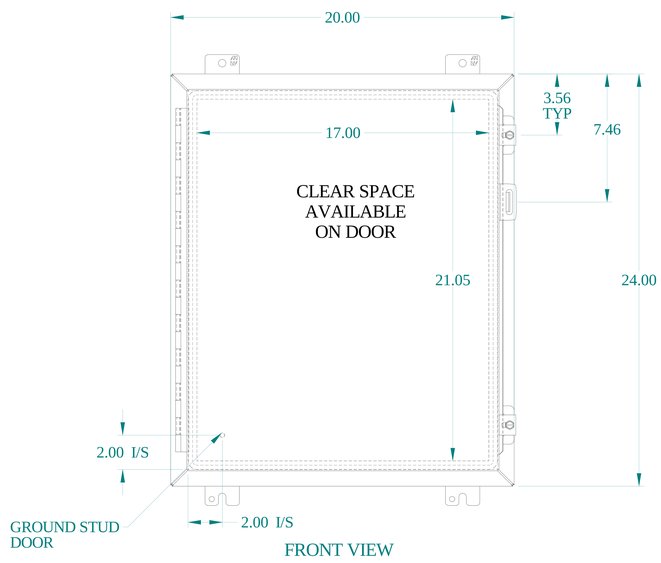

FRONT VIEW

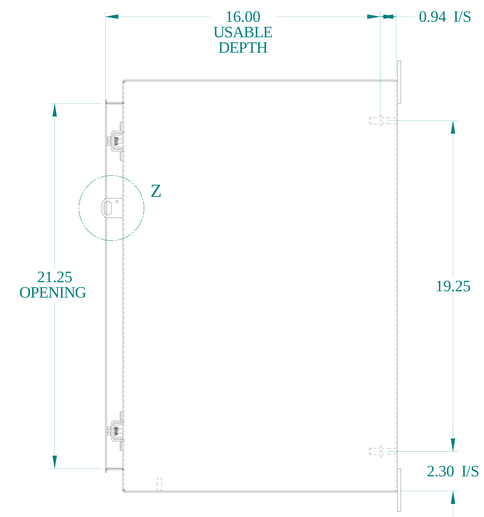

SIDE VIEW
(DOOR REMOVED)

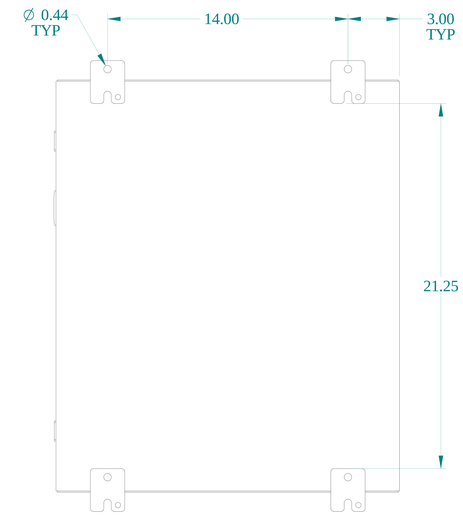

BACK VIEW

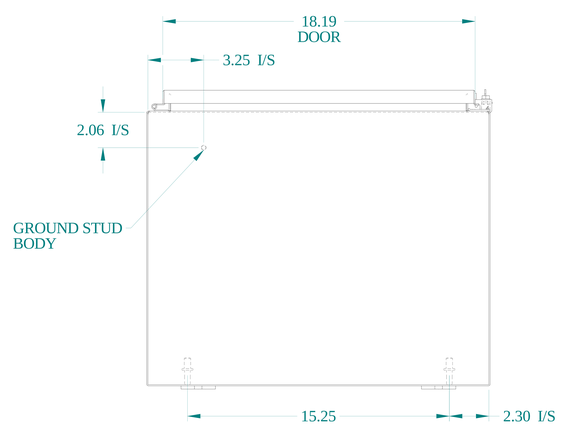

SIDE VIEW

HAMMOND MANUFACTURING®

www.hammondmfg.com

Data subject to change without notice.

Part # : 1418E16LP	Date : Feb. 20, 2026

Link:www.hammfg.com/1418E16LP