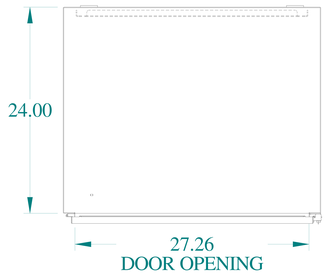

TOP VIEW

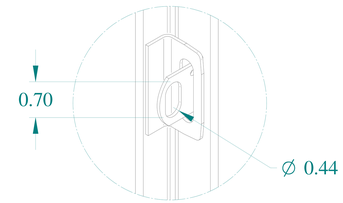

DETAIL Z

SIDE VIEW

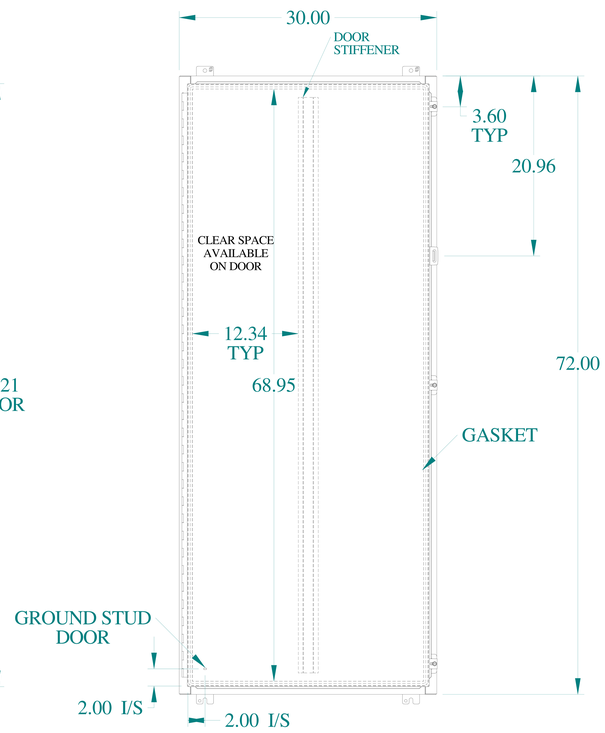

FRONT VIEW

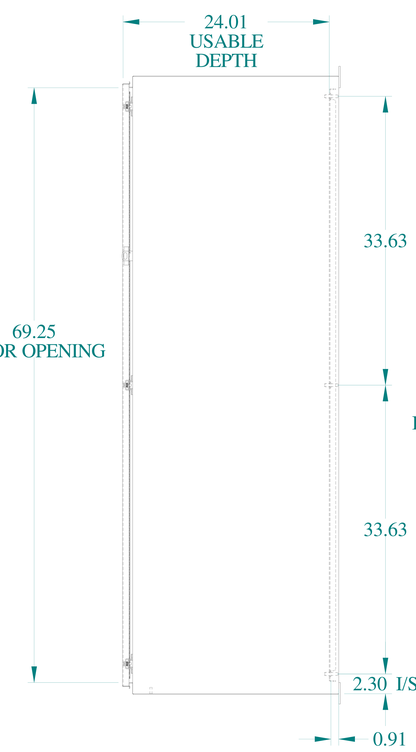

SIDE VIEW

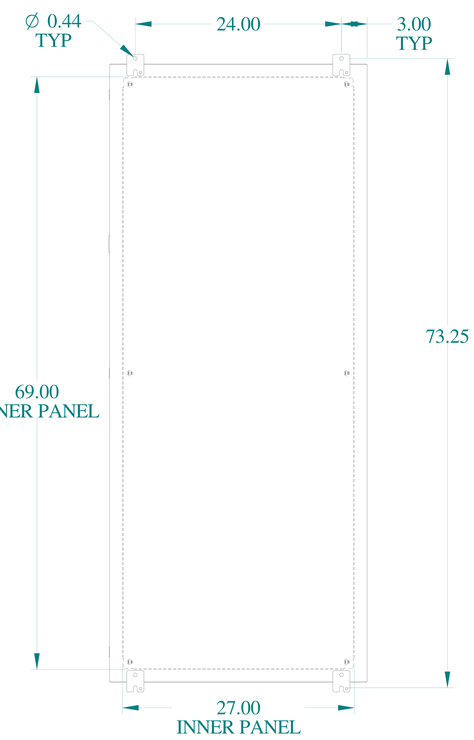

BACK VIEW

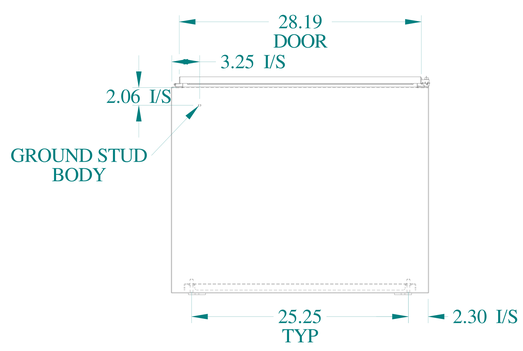

BOTTOM VIEW

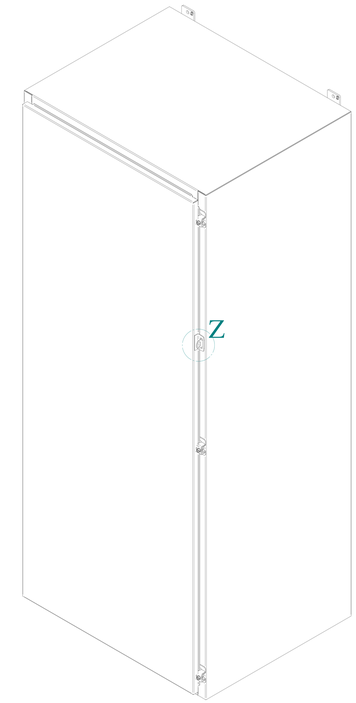

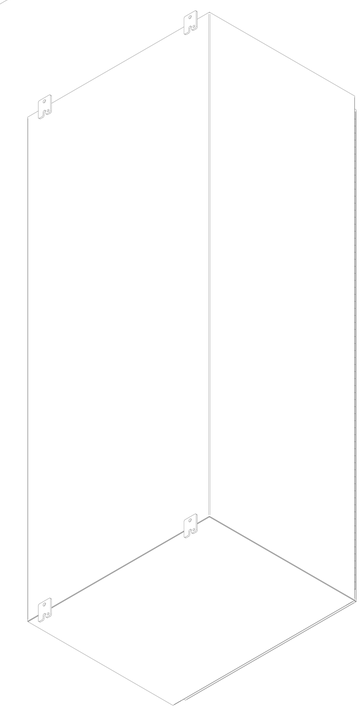

ISOMETRIC VIEWS

HAMMOND MANUFACTURING®

www.hammondmfg.com

Data subject to change without notice.

Part # : 1418U24	Date : Mar. 24, 2019

Link:www.hammfg.com/1418U24