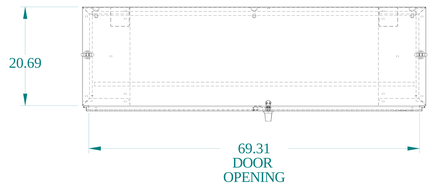


TOP VIEW

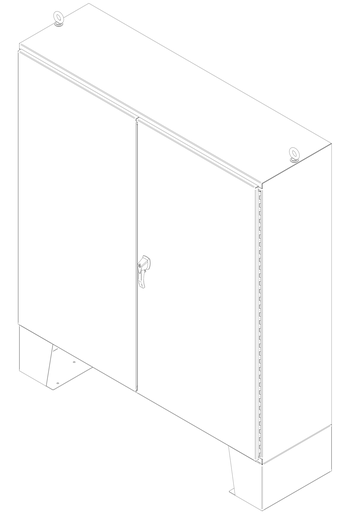

ISOMETRIC VIEWS

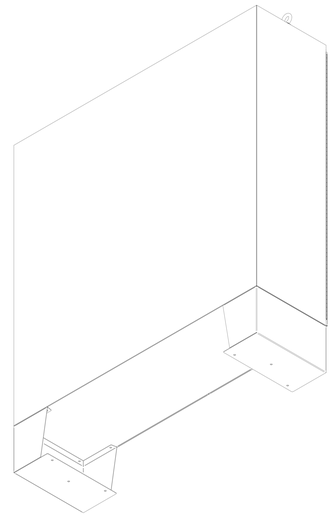

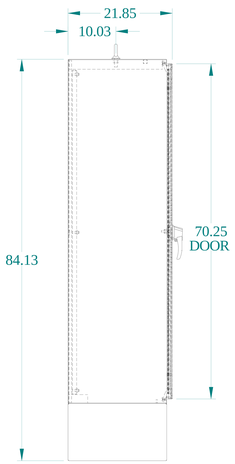


SIDE VIEW

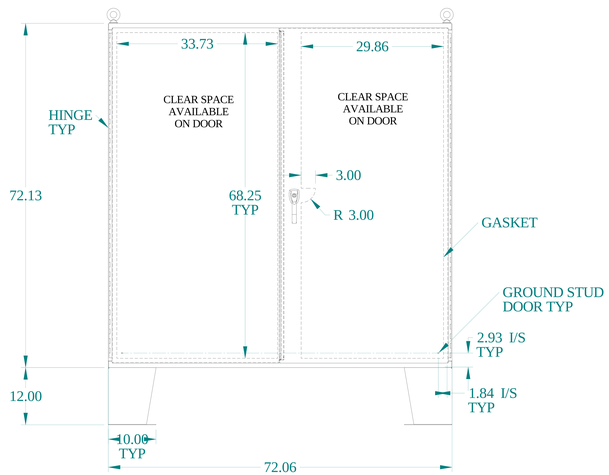


FRONT VIEW

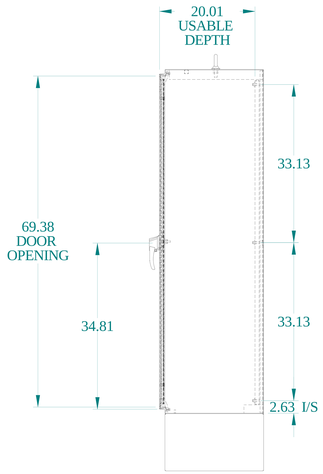


SIDE VIEW

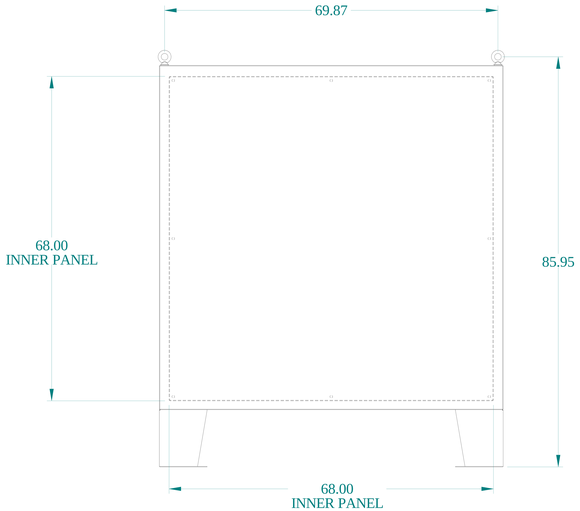


BACK VIEW

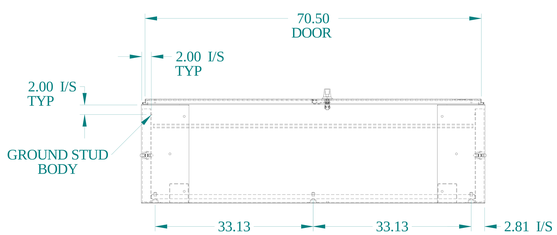


BOTTOM VIEW

HAMMOND MANUFACTURING®

www.hammondmfg.com

Data subject to change without notice.

| | |
|---|---|
| Part # : 1422F20F | Date : Mar. 16, 2023 |

Link:www.hammfg.com/1422F20F