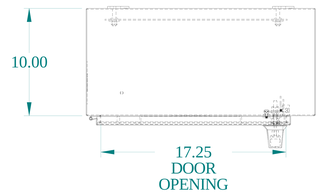


TOP VIEW

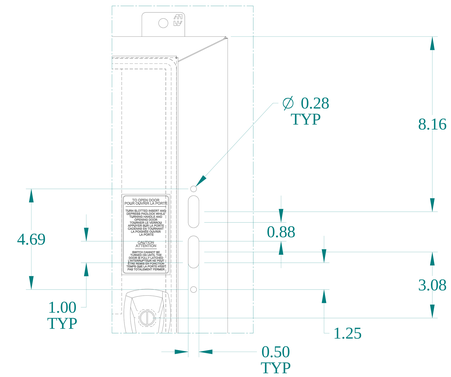


DETAIL Z

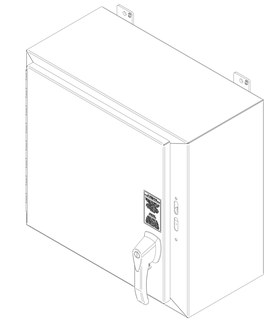

ISOMETRIC VIEWS

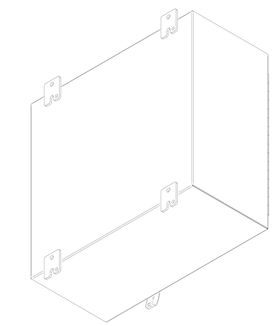

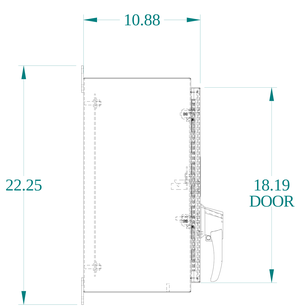


SIDE VIEW

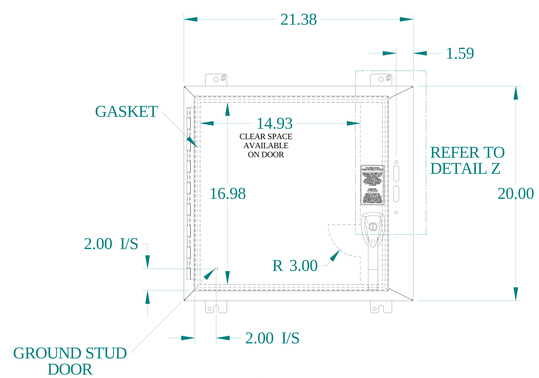


FRONT VIEW

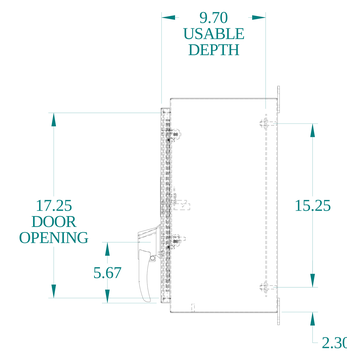


SIDE VIEW

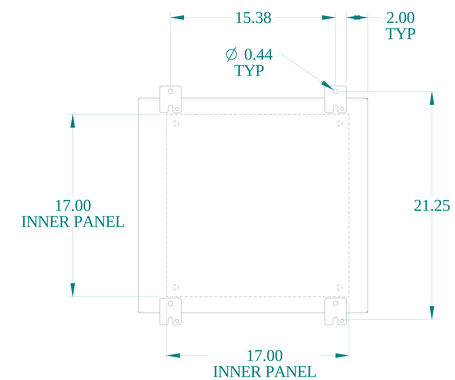


BACK VIEW

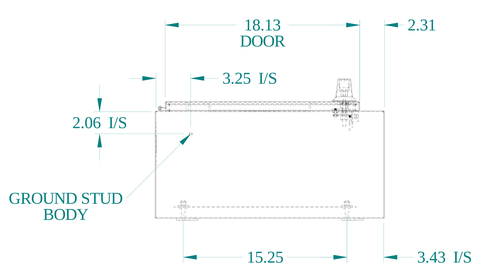


BOTTOM VIEW

HAMMOND MANUFACTURING®

www.hammondmfg.com

Data subject to change without notice.

| | |
|---|---|
| Part # : 1447SA10HK | Date : Feb. 28, 2023 |

Link:www.hammfg.com/1447SA10HK