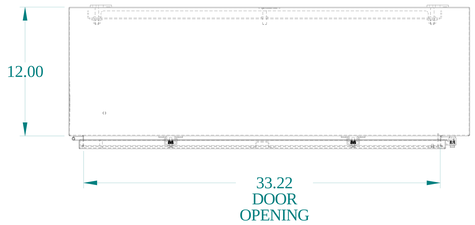

TOP VIEW

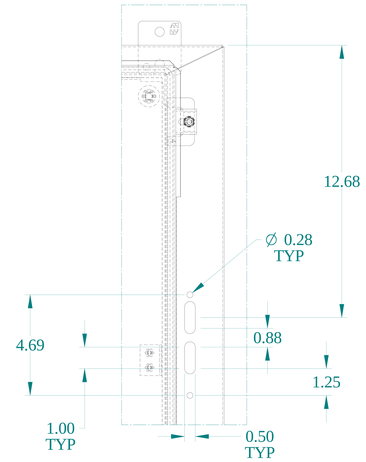

DETAIL Z

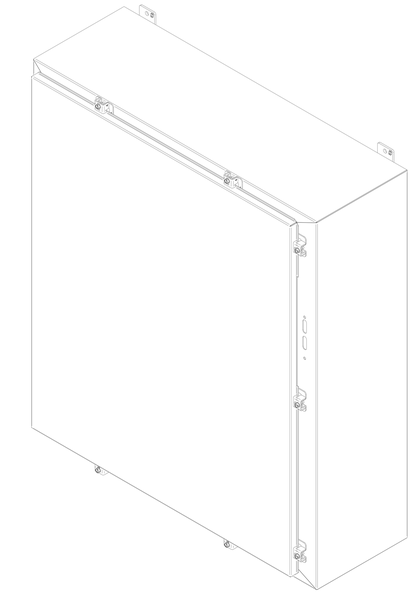

ISOMETRIC VIEWS

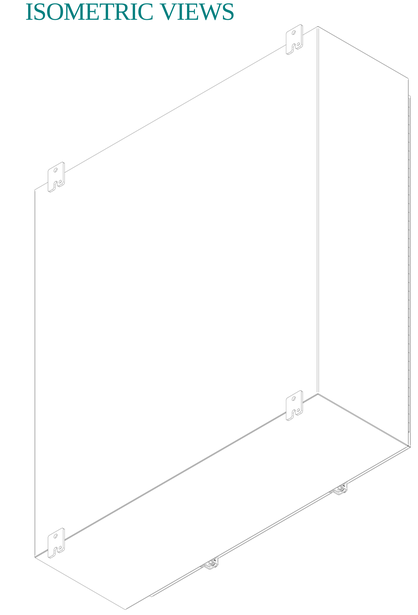

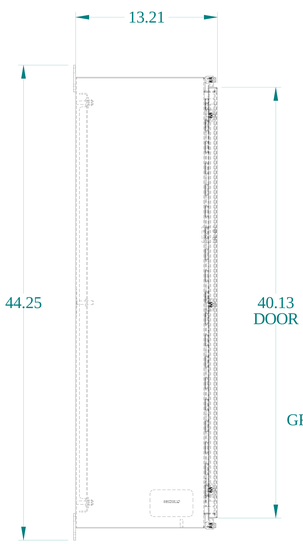

SIDE VIEW

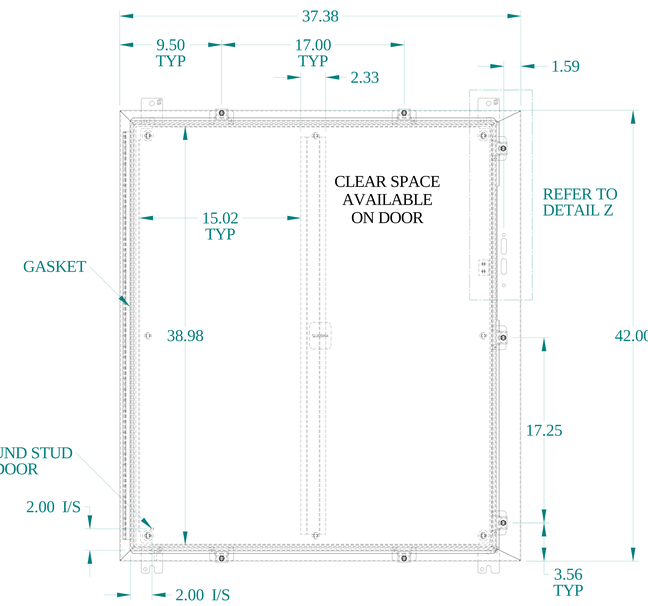

FRONT VIEW

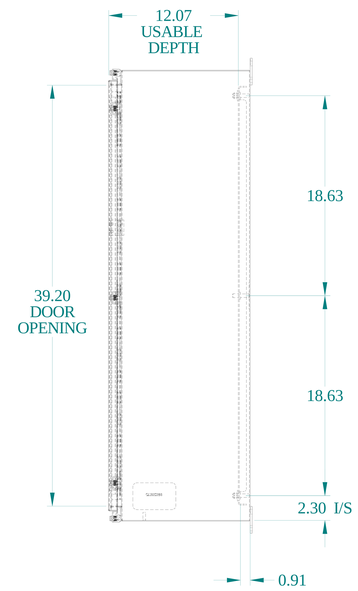

SIDE VIEW

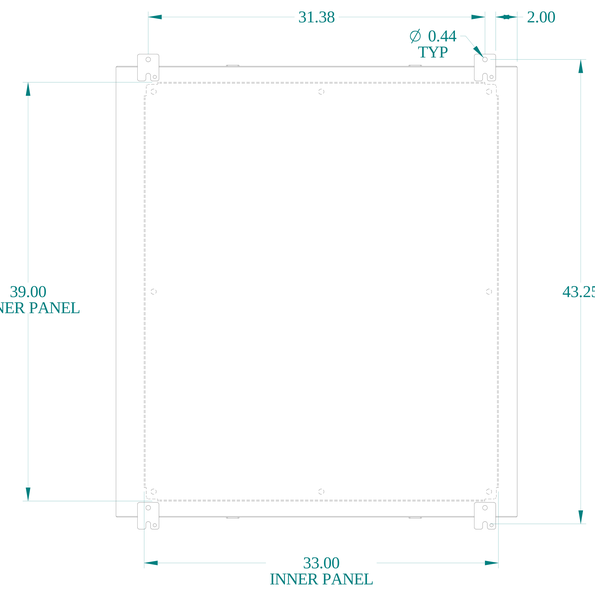

BACK VIEW

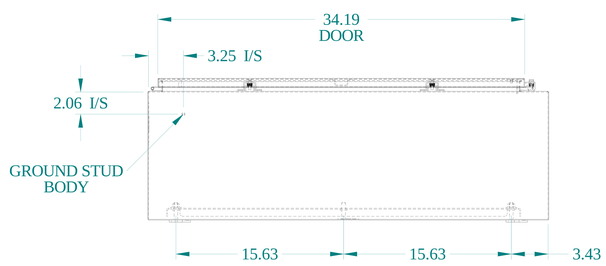

BOTTOM VIEW

HAMMOND MANUFACTURING®

www.hammondmfg.com

Data subject to change without notice.

Part # : 1447SN4J12	Date : Feb. 27, 2023

Link:www.hammfg.com/1447SN4J12