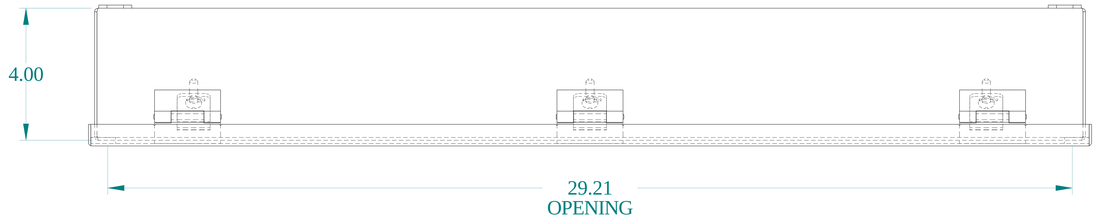

TOP VIEW

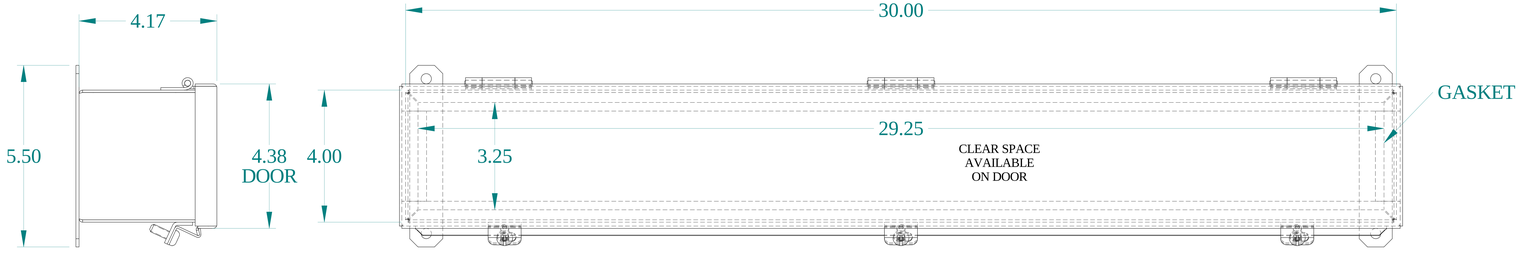

SIDE VIEW

FRONT VIEW

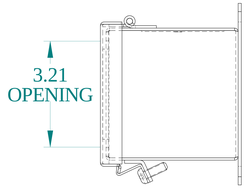

SIDE VIEW

ISOMETRIC VIEWS

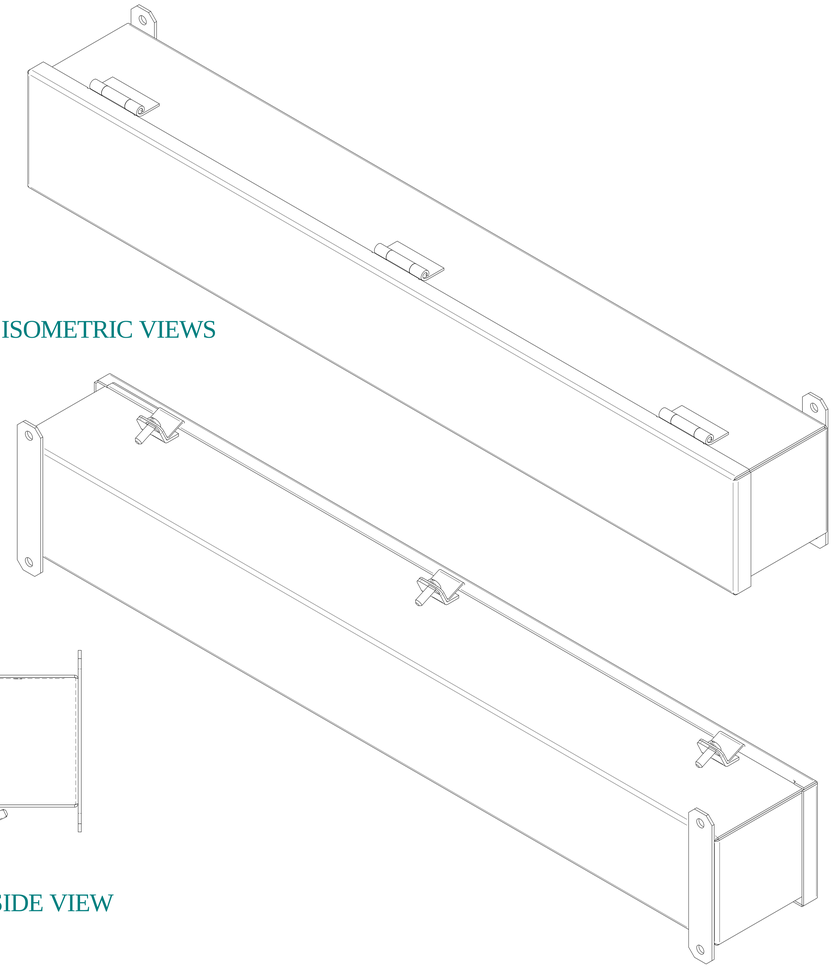

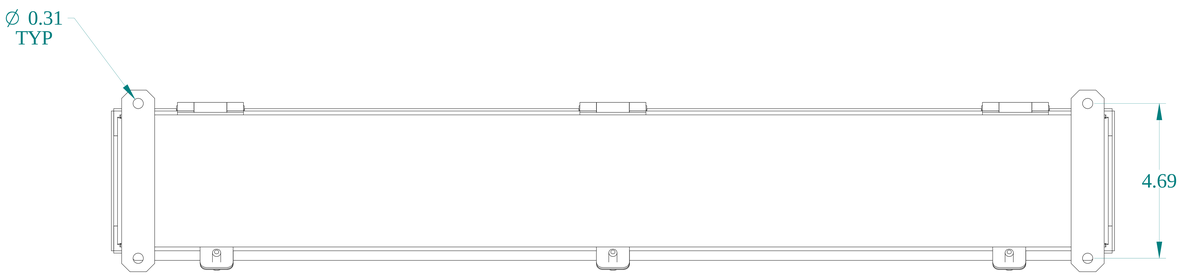

BACK VIEW

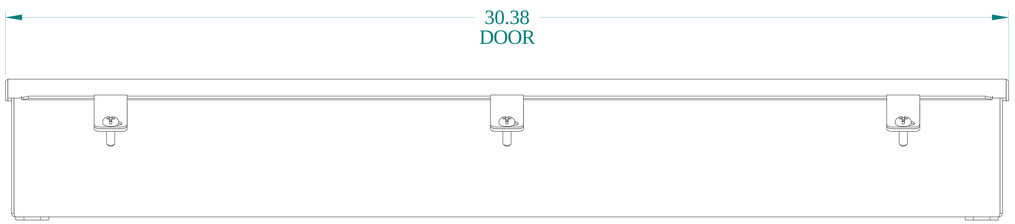

BOTTOM VIEW

HAMMOND MANUFACTURING®

www.hammondmfg.com

Data subject to change without notice.

Part # : 1486C30SS	Date : Aug. 25, 2021

Link:www.hammfg.com/1486C30SS