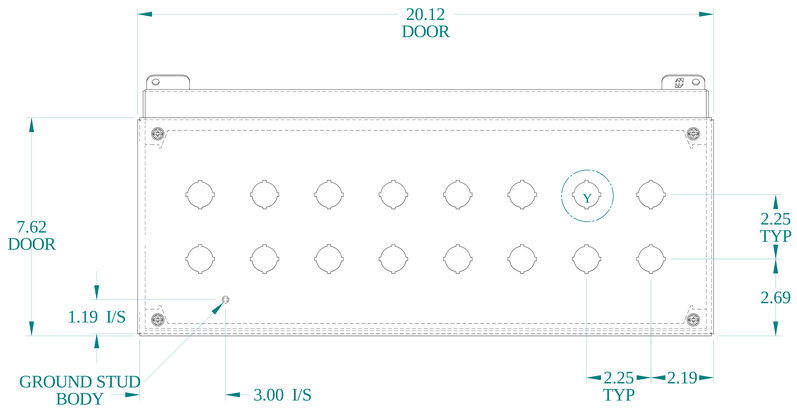

VIEW Z-Z

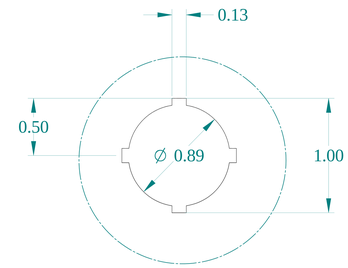

DETAIL Y
TYP

ISOMETRIC VIEWS

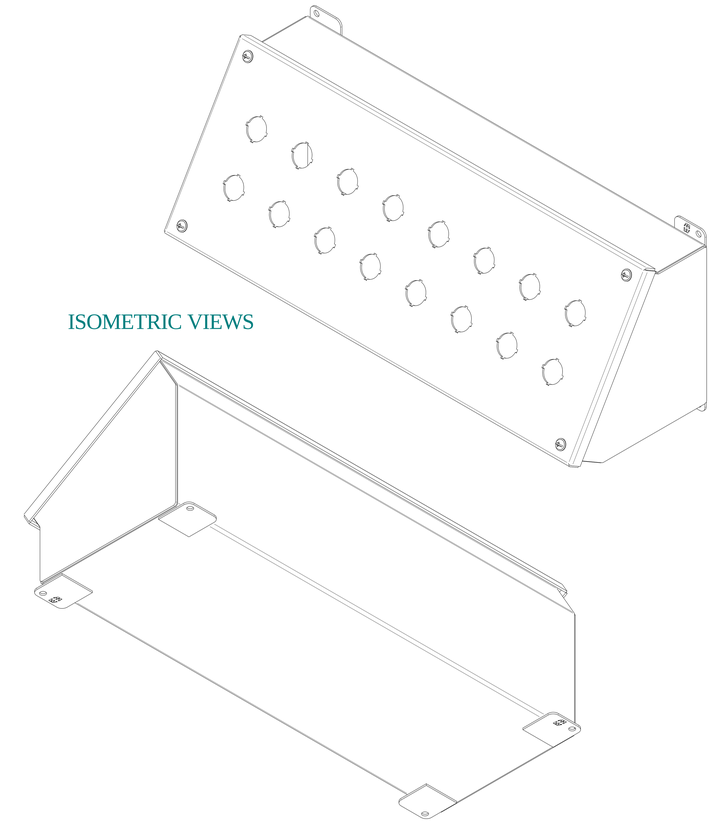

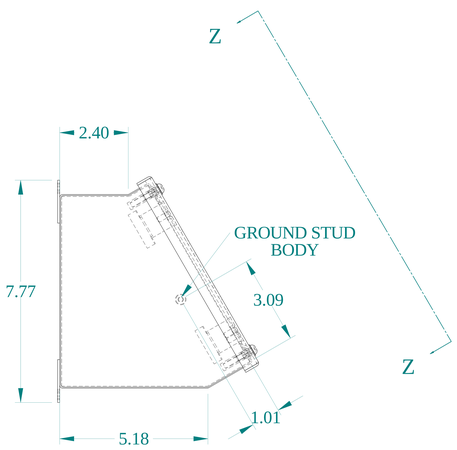

SIDE VIEW

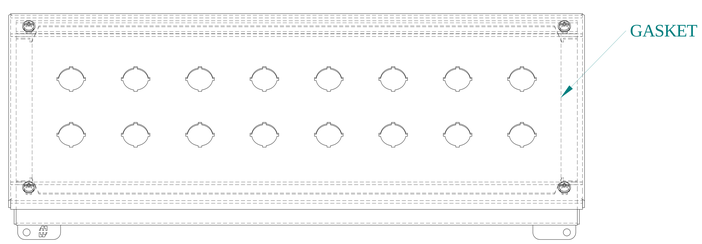

FRONT VIEW

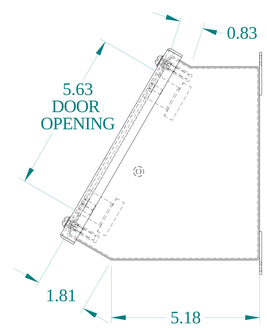

SIDE VIEW

BACK VIEW

BOTTOM VIEW

HAMMOND MANUFACTURING®

www.hammondmfg.com

Data subject to change without notice.

Part # : 1490MG16	Date : Mar. 3, 2023

Link:www.hammfg.com/1490MG16