TOP VIEW

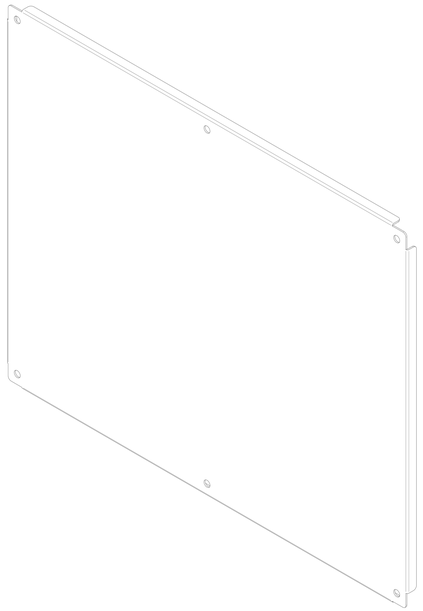

ISOMETRIC VIEWS

SIDE VIEW

FRONT VIEW

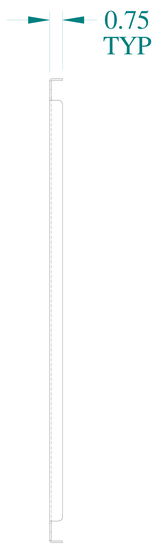

SIDE VIEW

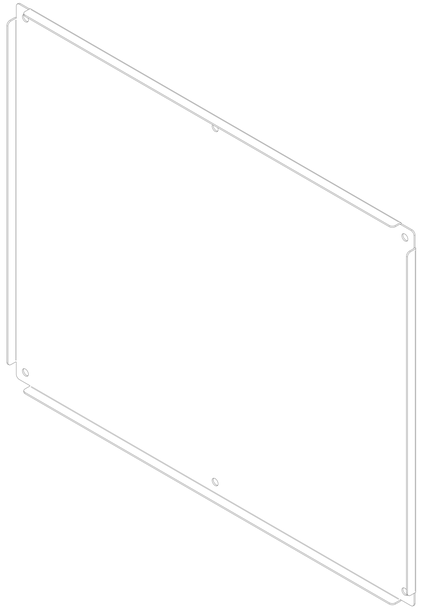

HAMMOND MANUFACTURING®

www.hammondmfg.com

Data subject to change without notice.

Part # : 18P3327S16	Date : Jan 28, 2020

Link:www.hammfg.com/18P3327S16