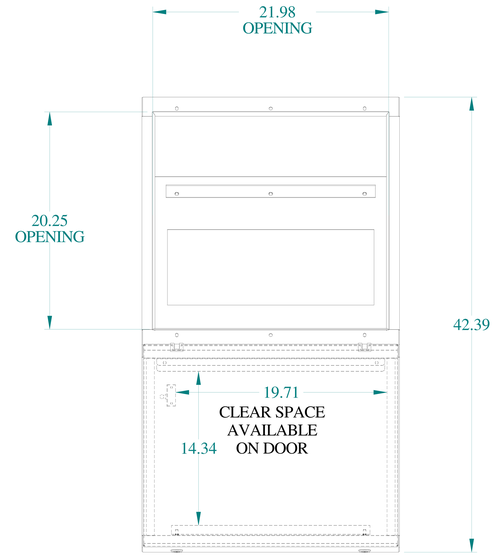

VIEW Z-Z

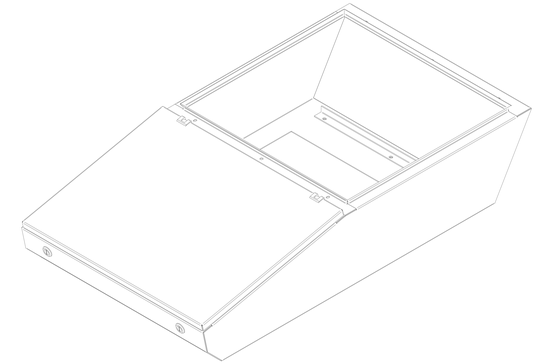

ISOMETRIC VIEWS

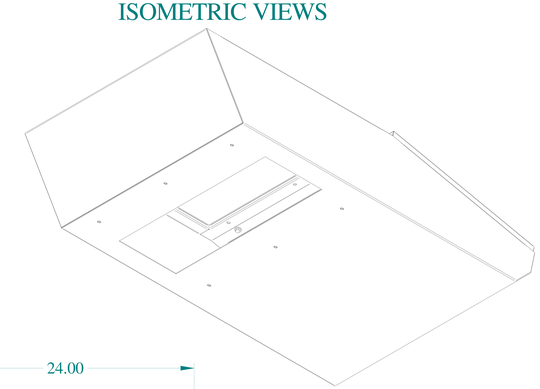

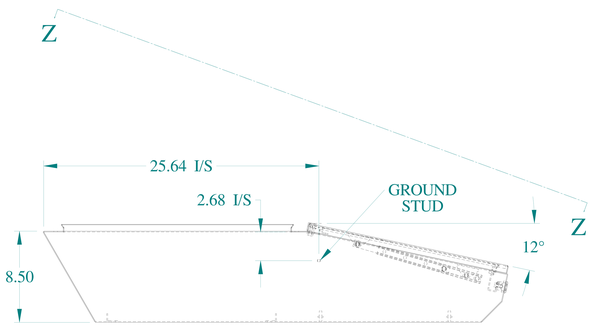

SIDE VIEW

FRONT VIEW

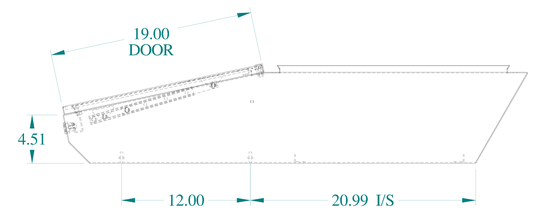

SIDE VIEW

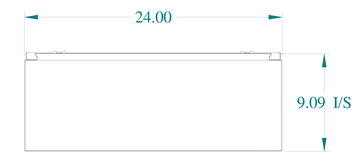

BACK VIEW

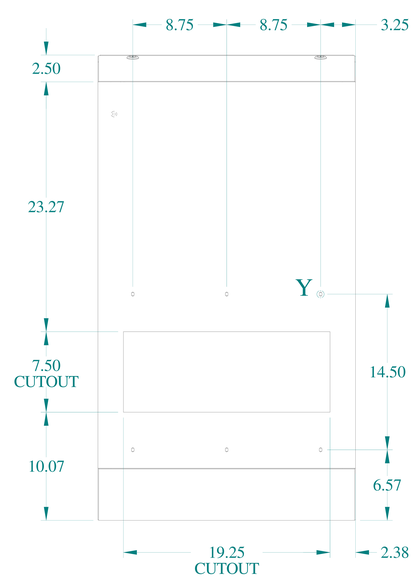

BOTTOM VIEW

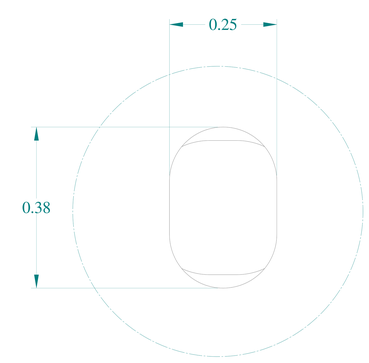

DETAIL Y
TYP

HAMMOND MANUFACTURING®

www.hammondmfg.com

Data subject to change without notice.

Part # : 2CLD82443	Date : Mar. 24, 2019

Link:www.hammfg.com/2CLD82443