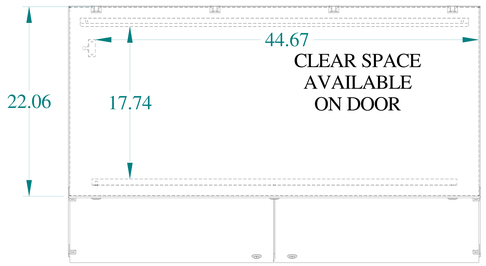

VIEW Z-Z

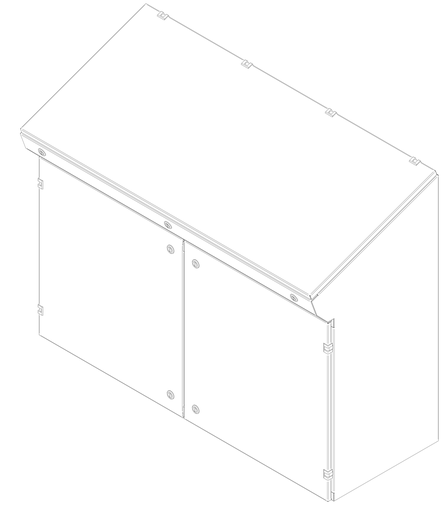

ISOMETRIC VIEWS

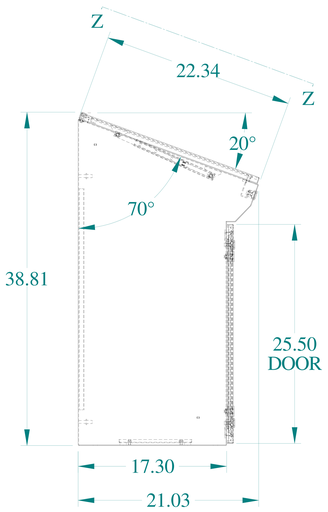

SIDE VIEW

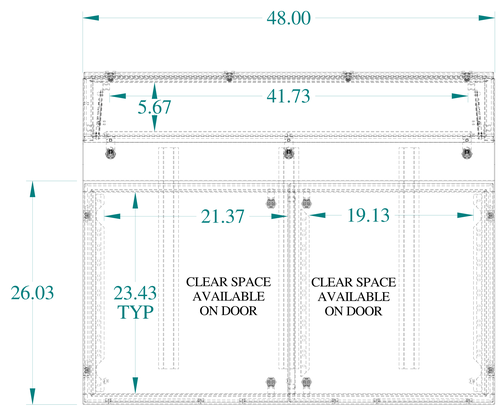

FRONT VIEW

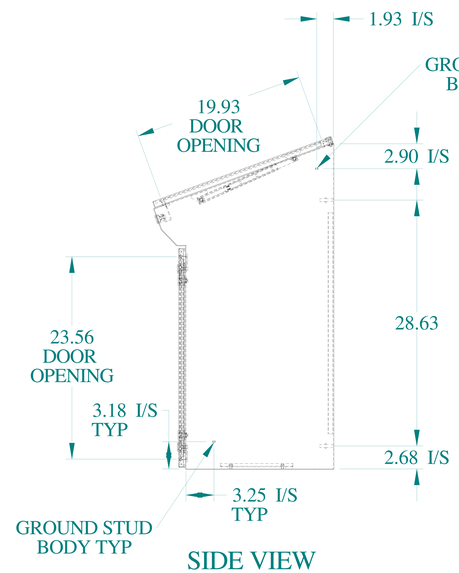

SIDE VIEW

BACK VIEW

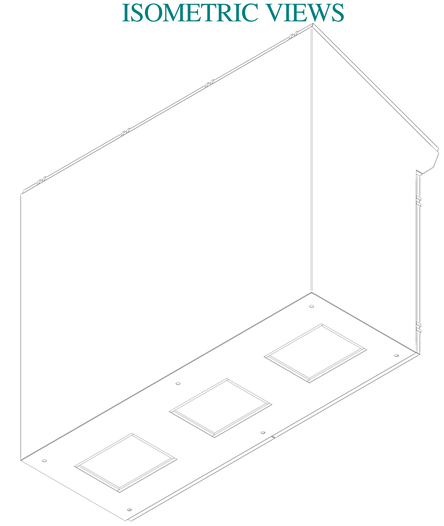

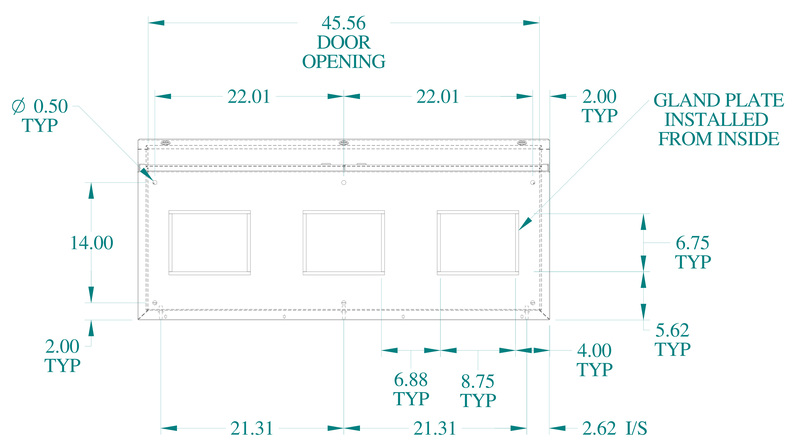

BOTTOM VIEW

HAMMOND MANUFACTURING®

www.hammondmfg.com

Data subject to change without notice.

Part # : 2CSC2048	Date : Mar. 24, 2019

Link:www.hammfg.com/2CSC2048