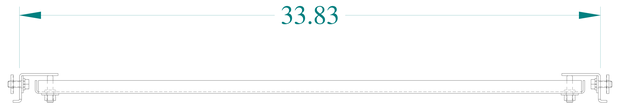


TOP VIEW

SIDE VIEW

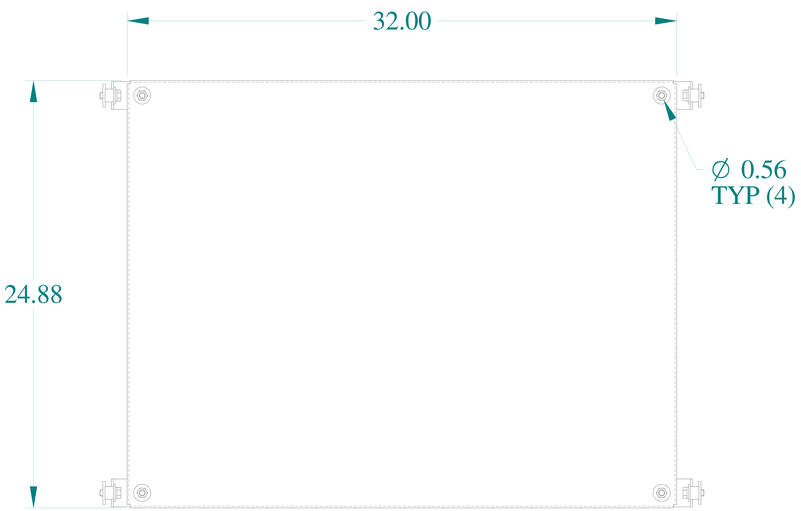


FRONT VIEW

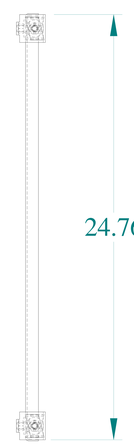


SIDE VIEW

BACK VIEW

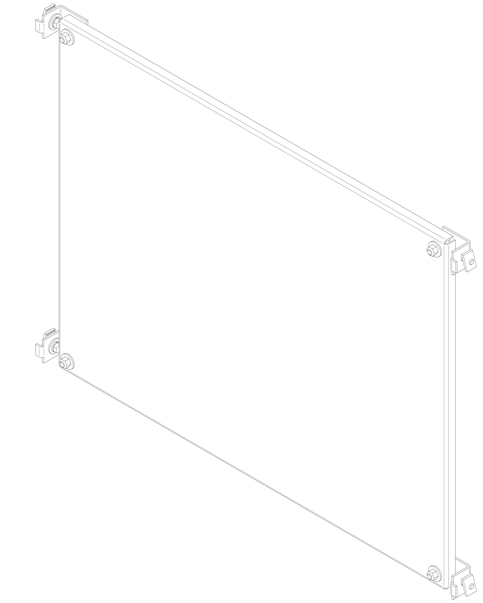

ISOMETRIC VIEWS

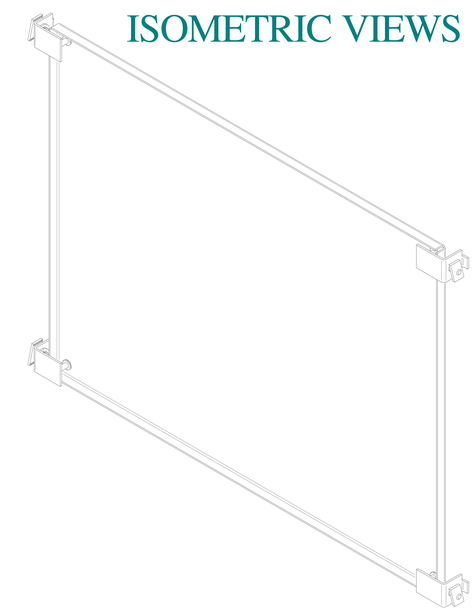

BOTTOM VIEW

HAMMOND MANUFACTURING®

www.hammondmfg.com

Data subject to change without notice.

| | |
|---|---|
| Part # : 60TYHWG | Date : Feb 10, 2020 |

Link:www.hammfg.com/60TYHWG