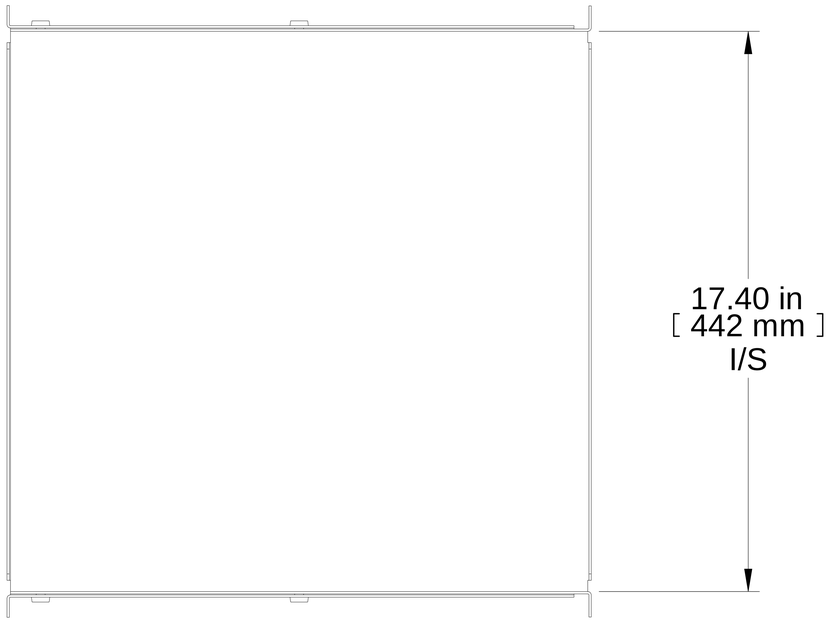


TOP VIEW

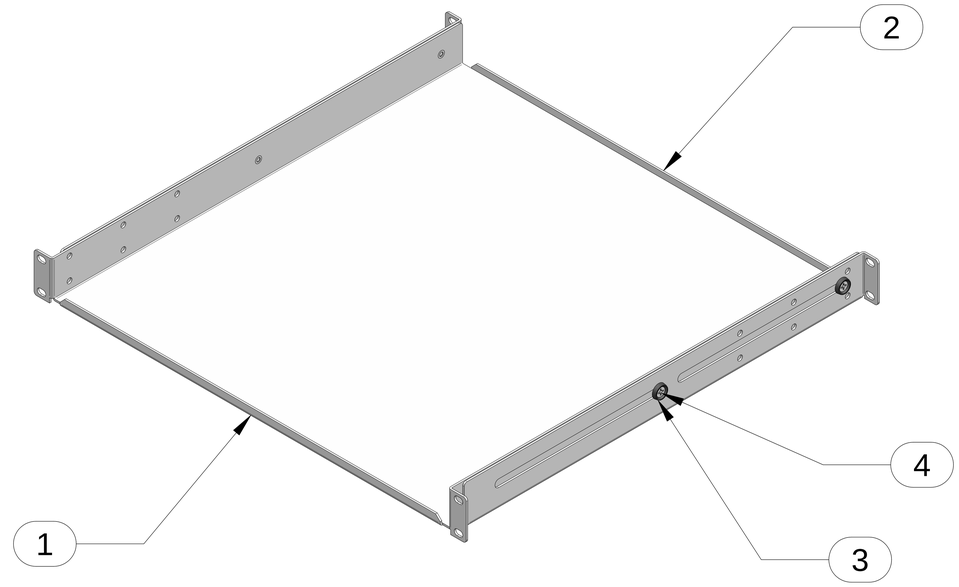


ISOMETRIC

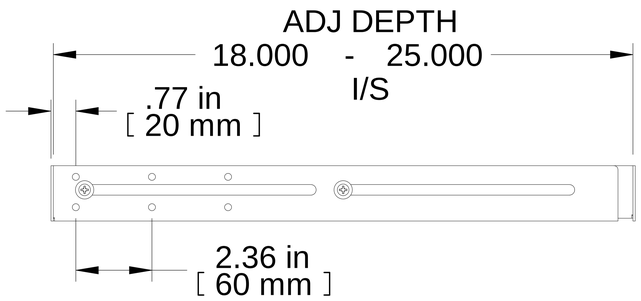


L.S. VIEW

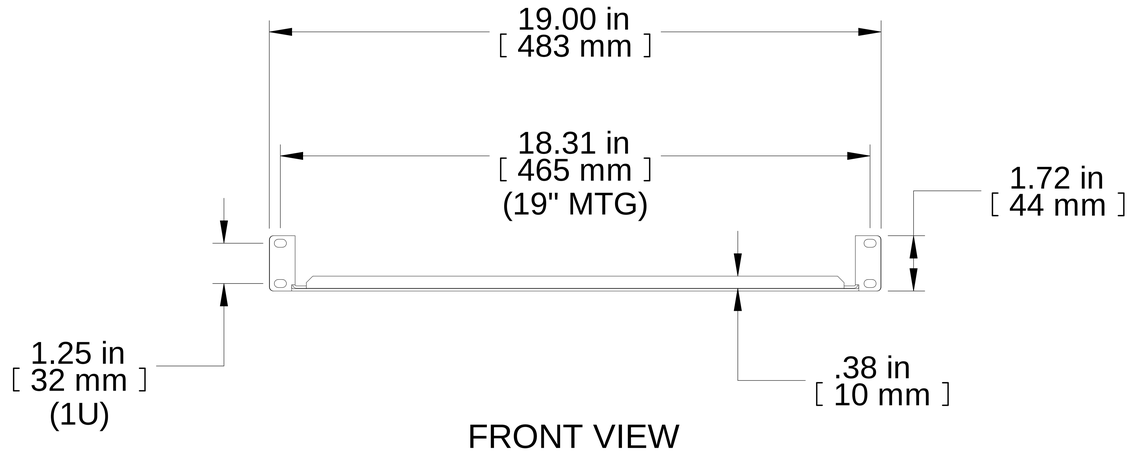


FRONT VIEW

| Item Number | Title | Quantity |
|---|---|---|
| 1 | ADSU - SOLID SHELF FRONT (1825) | 1 |
| 2 | ADSU - SOLID SHELF REAR (1825) | 1 |
| 3 | #10 CUP WASHER BLK NYLON | 4 |
| 4 | SCREW - 10-32 X 1/4" CSK PH ZP | 4 |

**PART NUMBERS**

| | |
|---|---|
| ADSU1825BK | PAINTED BLACK TEXTURED |

**NOTES**

Maximum Weight Load: 350 lb
Mounting Hardware Not Included
See Hammond Website for More Information

**Français**

Pour tous les détails sur nos produits,
svp veuillez consulter notre site www.hammondmfg.com

Data subject to change without notice. Isometric drawing not to scale.
Les données sont sujettes à changement sans préavis.

HAMMOND MANUFACTURING®

www.hammondmfg.com

**PART NO.** **ADSU1825BK**