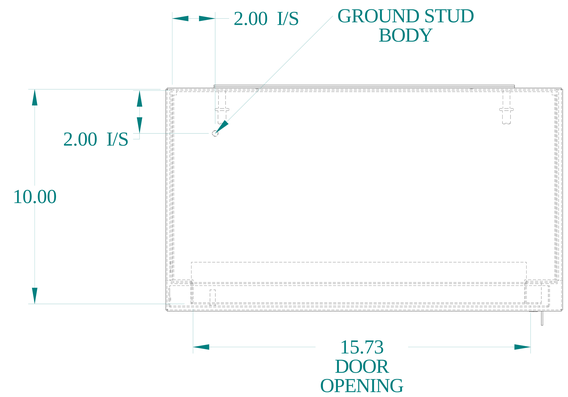

TOP VIEW

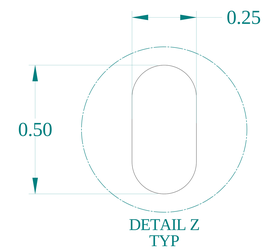

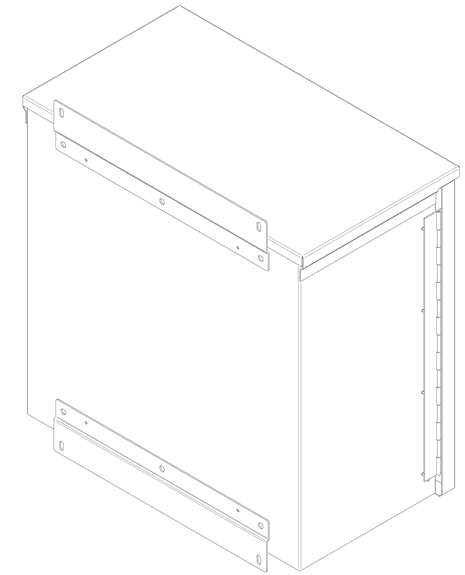

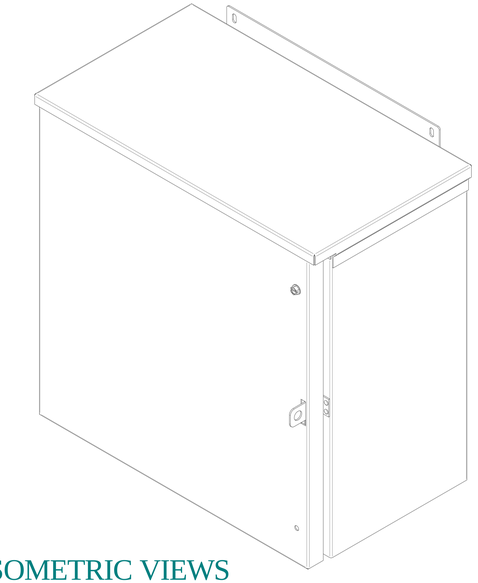

ISOMETRIC VIEWS

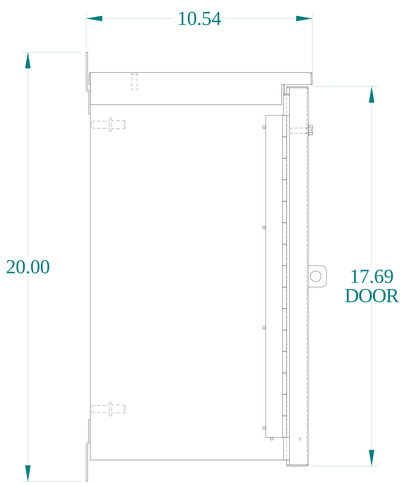

SIDE VIEW

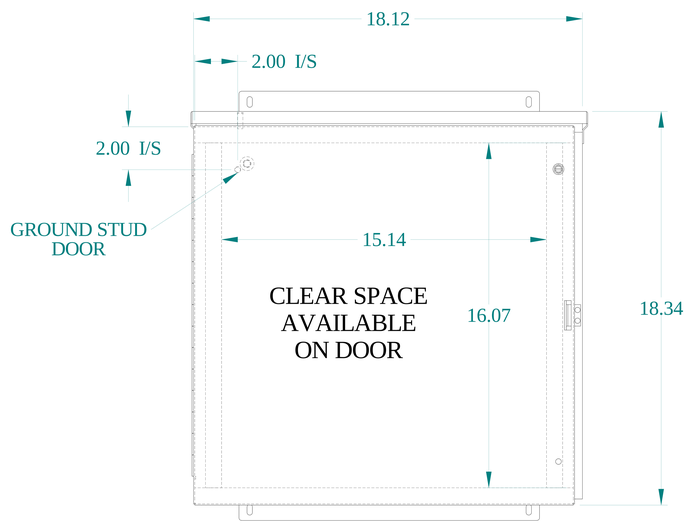

FRONT VIEW

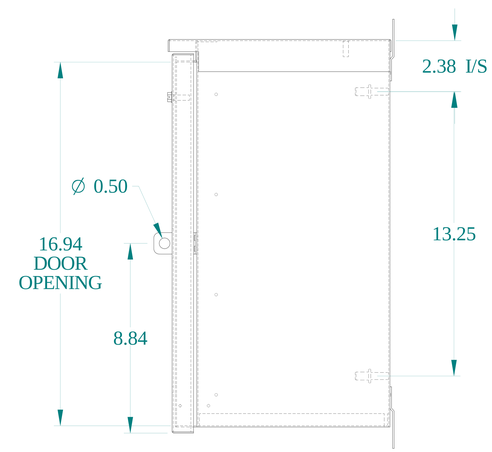

SIDE VIEW

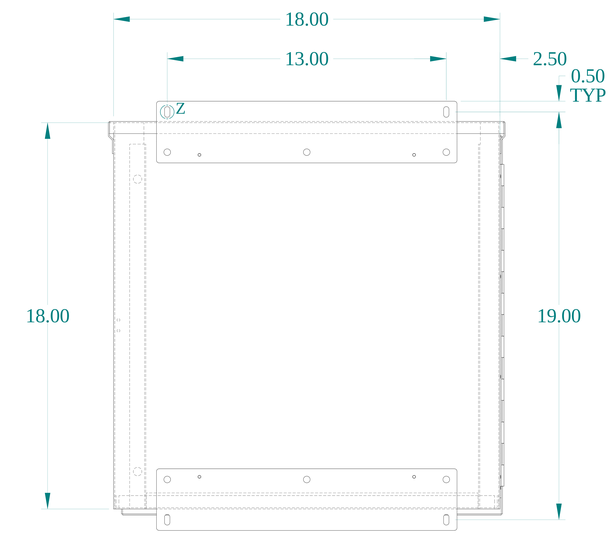

BACK VIEW

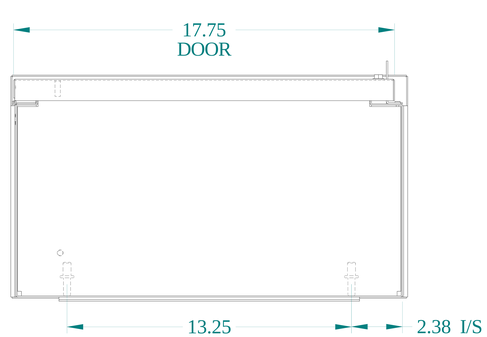

BOTTOM VIEW

HAMMOND MANUFACTURING®

www.hammondmfg.com

Data subject to change without notice.

Part # : C3R181810HCR	Date : Apr. 30, 2020

Link:www.hammfg.com/C3R181810HCR