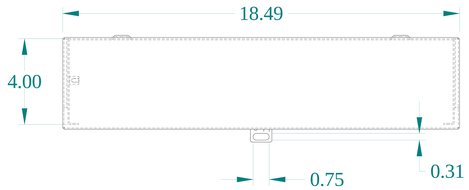

TOP VIEW

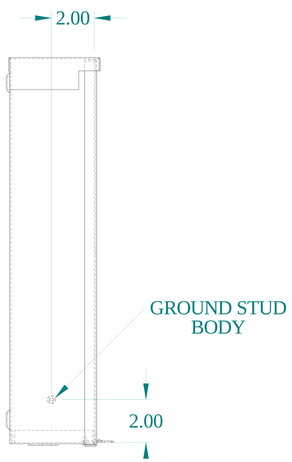

SIDE VIEW

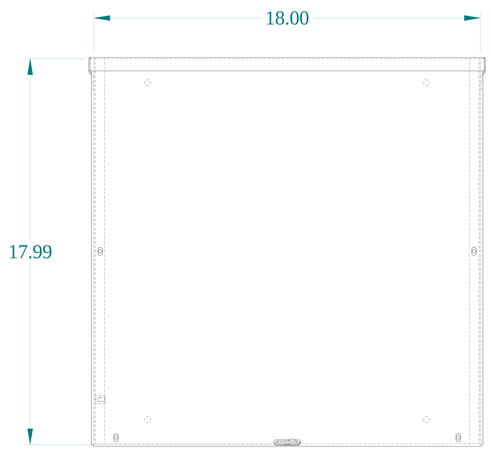

FRONT VIEW

SIDE VIEW

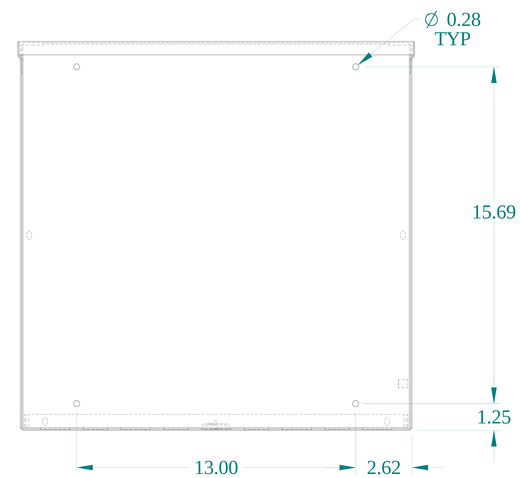

BACK VIEW

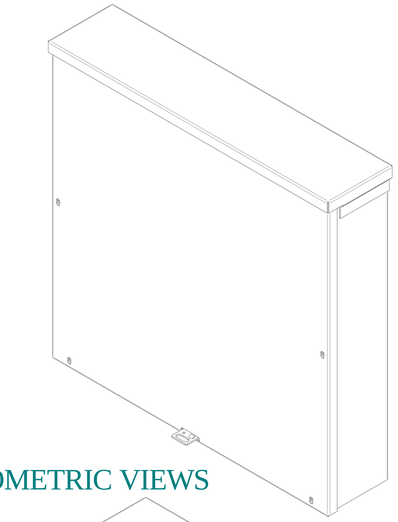

ISOMETRIC VIEWS

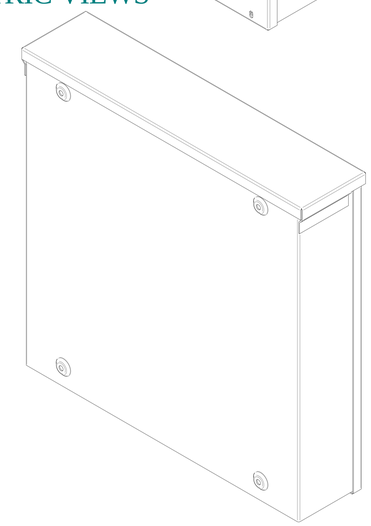

DETAIL Y
TYP

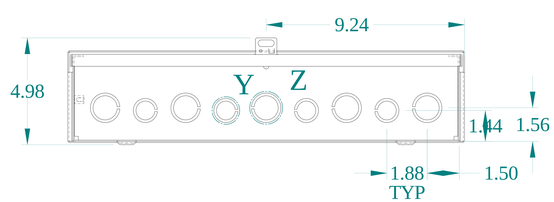

BOTTIOM VIEW

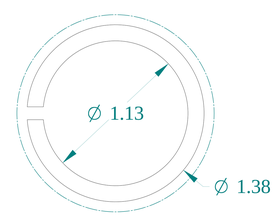

DETAIL Z
TYP

HAMMOND MANUFACTURING®

www.hammondmfg.com

Data subject to change without notice.

Part # : C3R18184SC	Date : Aug. 29, 2023

Link:www.hammfg.com/C3R18184SC