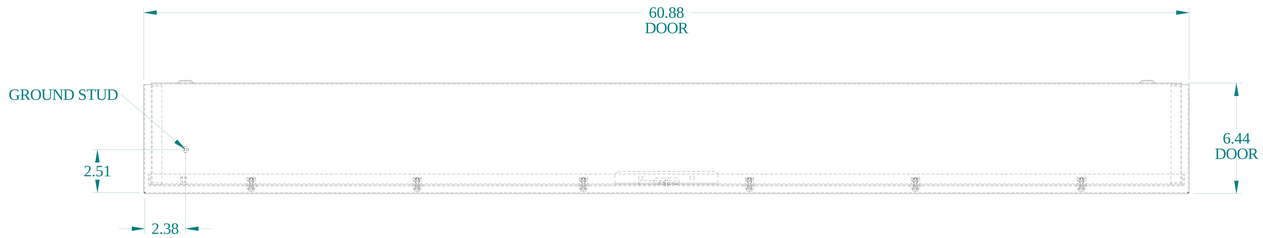

TOP VIEW

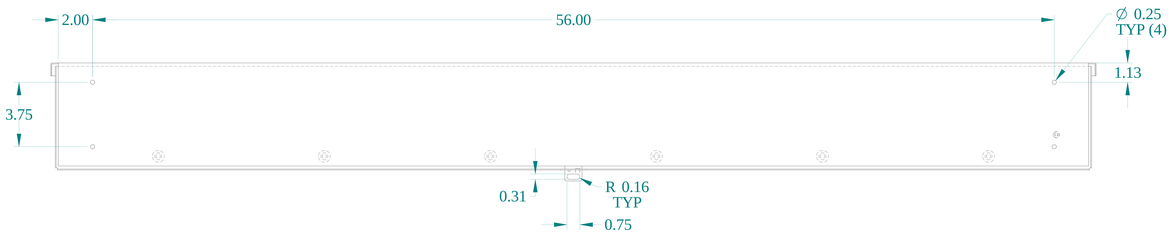

BACK VIEW

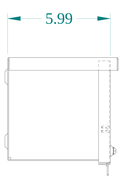

SIDE VIEW

FRONT VIEW

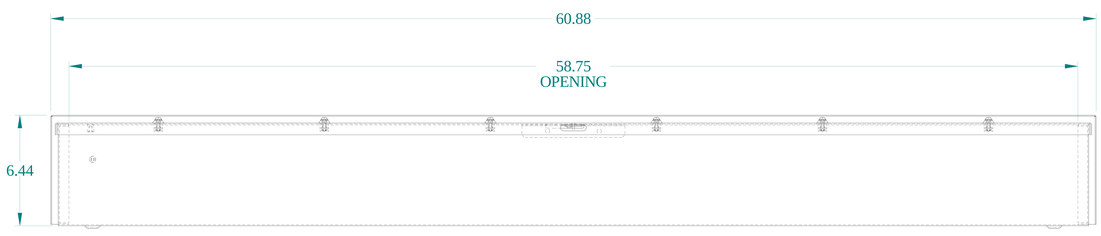

BOTTOM VIEW

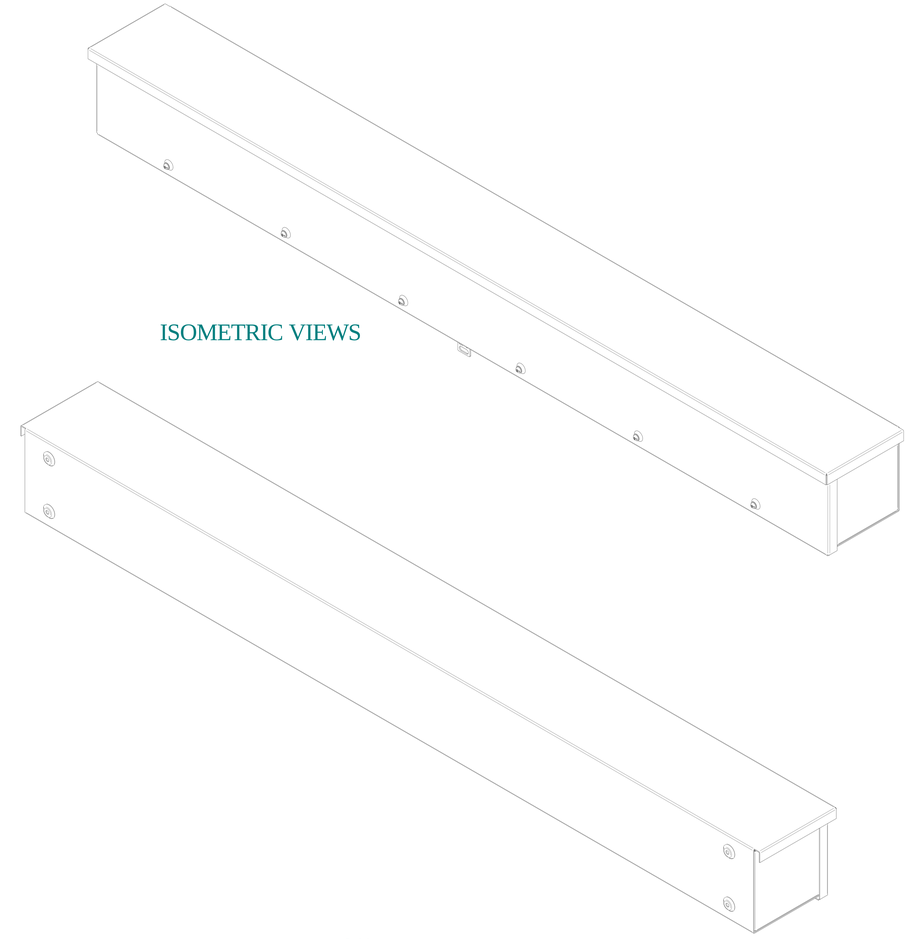

ISOMETRIC VIEWS

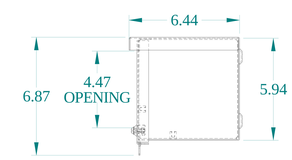

SIDE VIEW

HAMMOND MANUFACTURING®

www.hammondmfg.com

Data subject to change without notice.

Part # : C3RWT660G	Date : Mar. 28, 2024

Link:www.hammfg.com/C3RWT660G