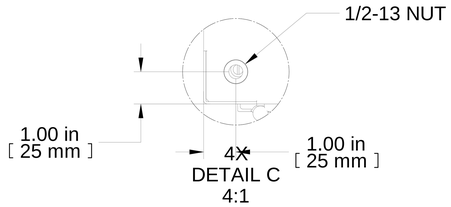

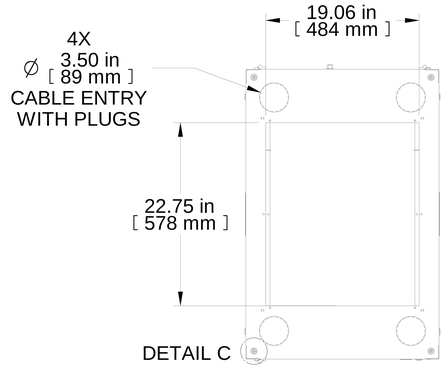

TOP OPENING
PLATE REMOVED

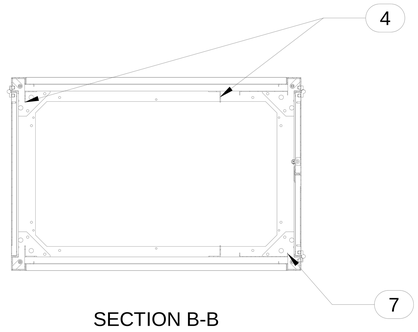

SECTION B-B

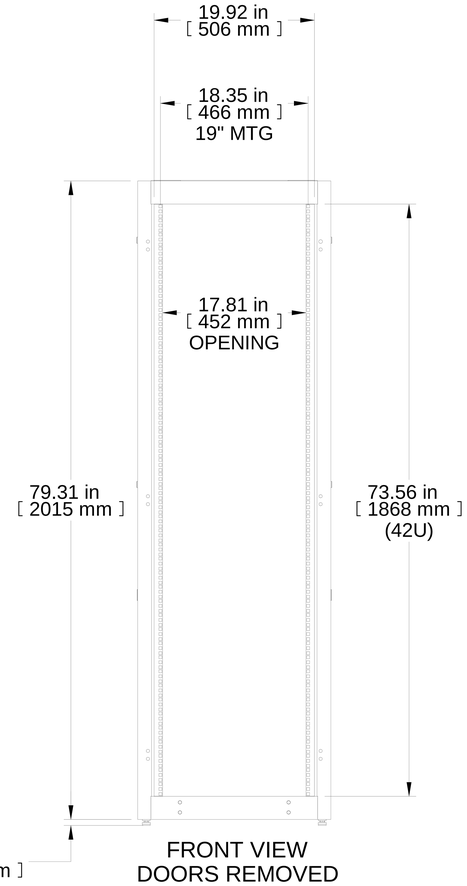

FRONT VIEW
DOORS REMOVED

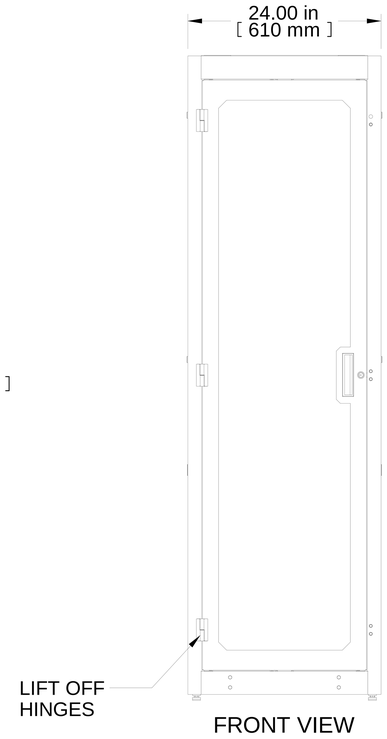

FRONT VIEW

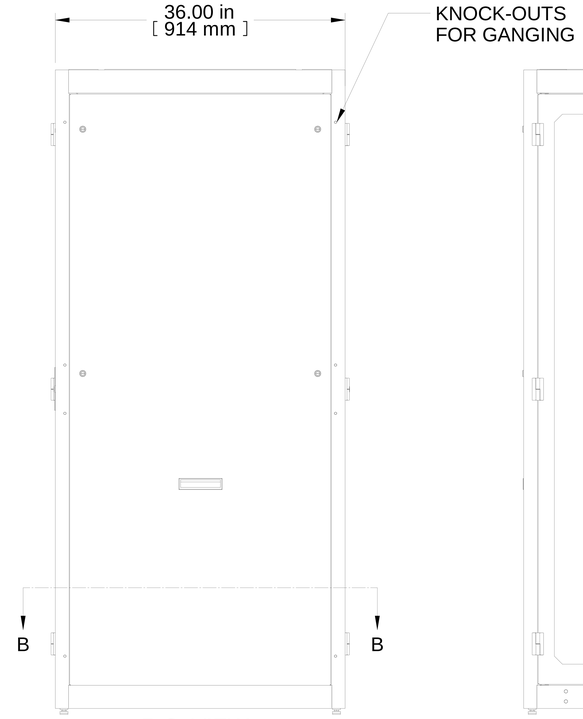

R.S. VIEW

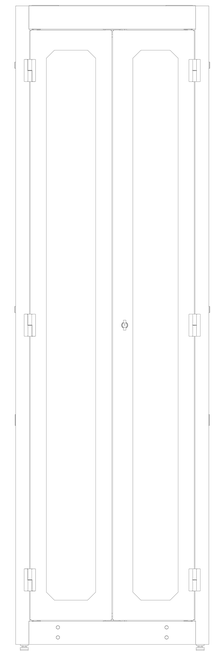

REAR VIEW

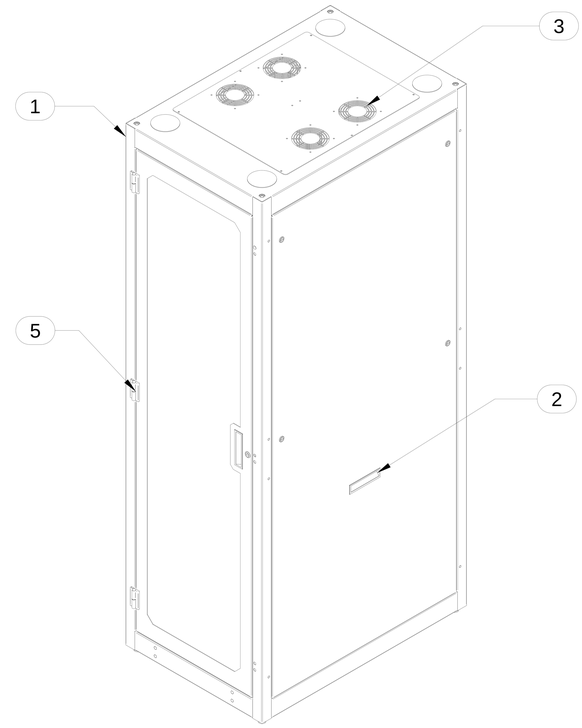

ISOMETRIC

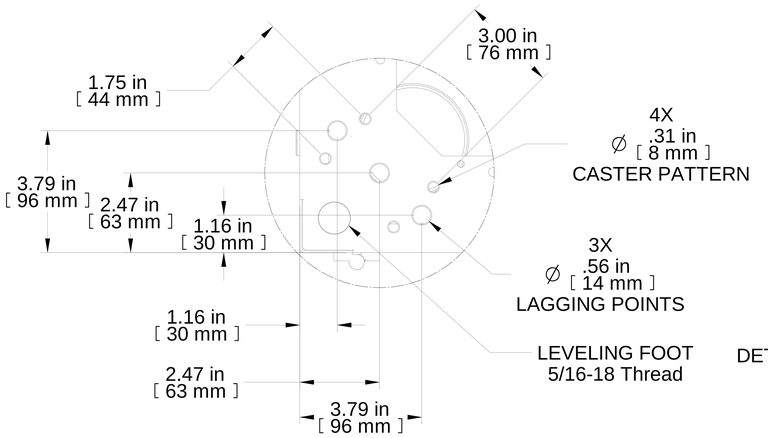

4X
DETAIL A
4:1

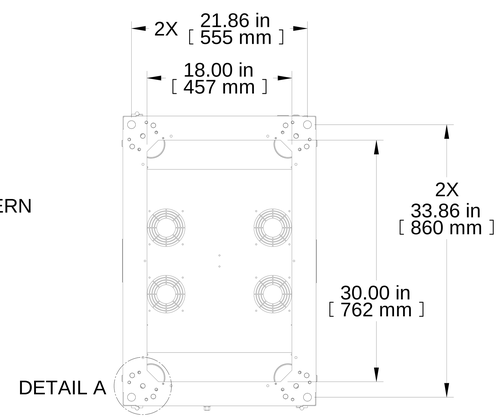

BOTTOM VIEW
BOTTOM OPENING

Item Number	Title	Quantity
1	C4 - FRAME (24X73X36)	1
2	C4 SOLID SIDE PANEL (7336) PAIR	2
3	C2 FAN TOP PLATE (23X20)	1
4	DC100/C4F24 SQ PANEL RAIL 73 (PAIR)	2
5	C4 VENTED PERF DOOR 24X73	1
6	C4 PERF BARN DOOR 24X73	1
7	VCTPDU - 42U CABLE MANAGEMENT	2

PART NUMBERS

C4RR247336SBK1	PAINTED BLACK TEXTURE

NOTES

See Hammond Website for Additional Accessories

Français

Pour tous les détails sur nos produits, svp veuillez consulter notre site www.hammondmfg.com

Data subject to change without notice. Isometric drawing not to scale.
Les données sont sujettes à changement sans préavis.

HAMMOND MANUFACTURING®

www.hammondmfg.com

PART NO. **C4RR247336SBK1**