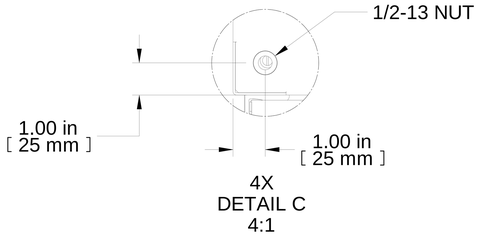

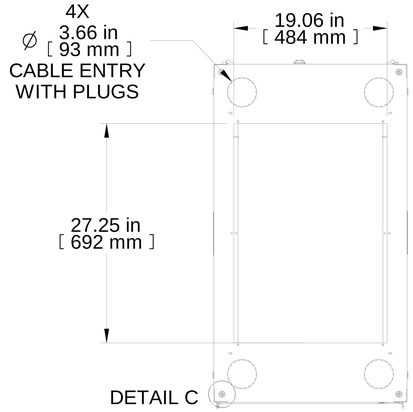

TOP OPENING
PLATE REMOVED

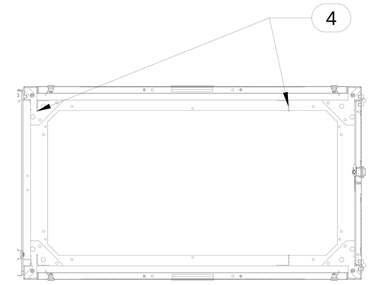

SECTION B-B

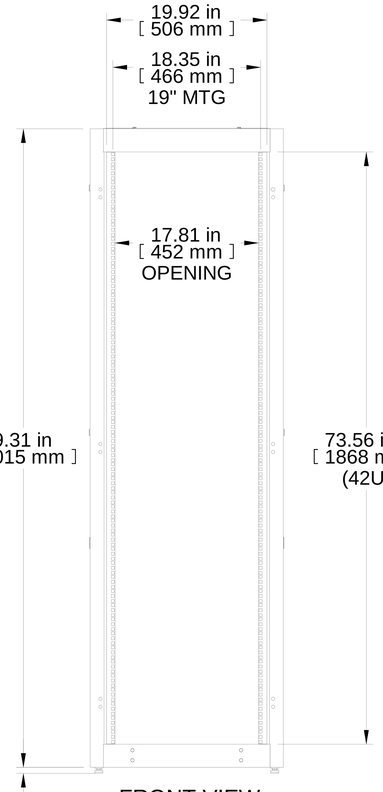

FRONT VIEW
DOORS REMOVED

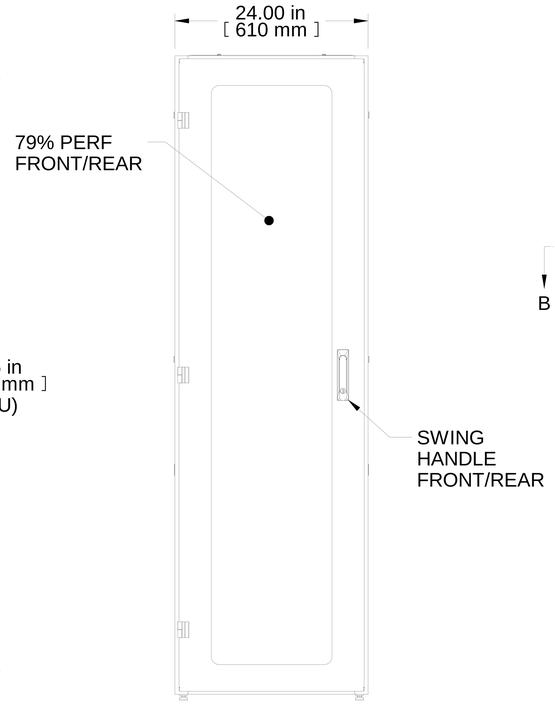

FRONT VIEW

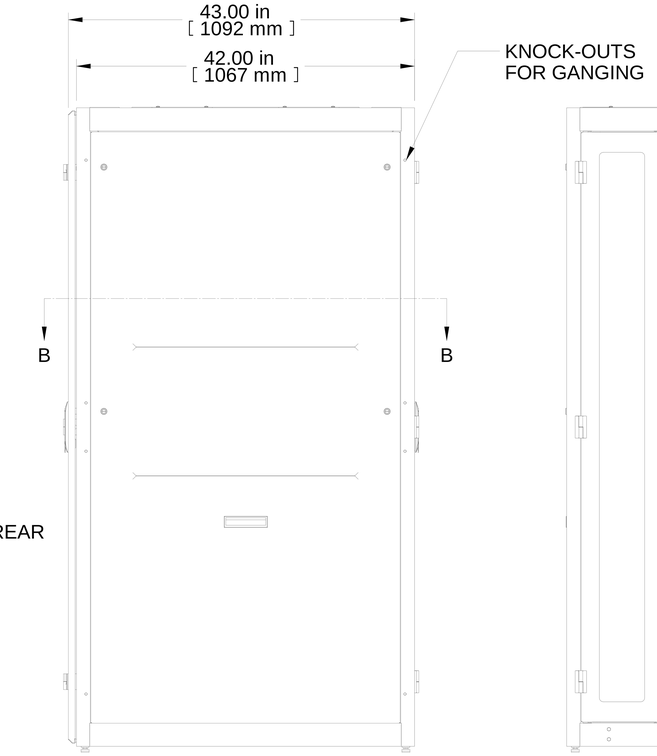

R.S. VIEW

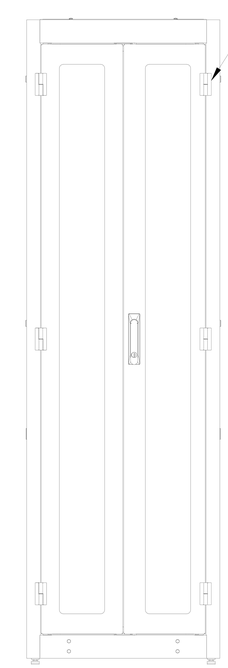

REAR VIEW

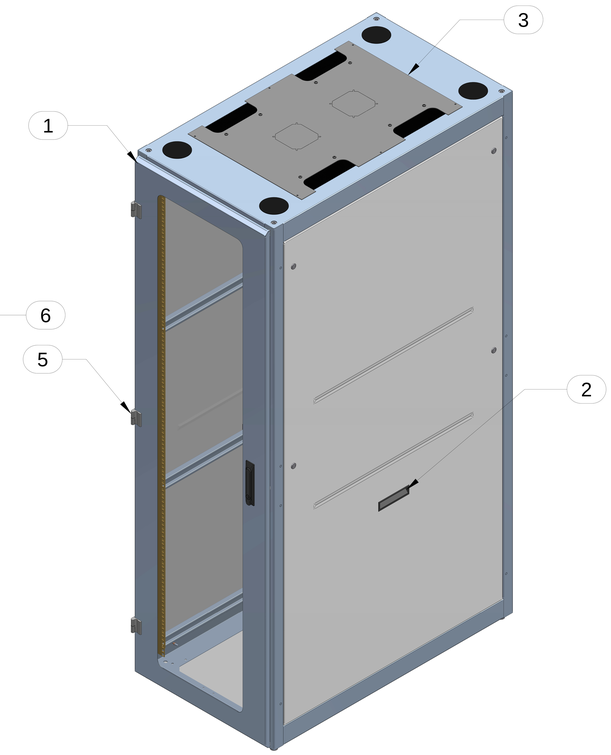

ISOMETRIC

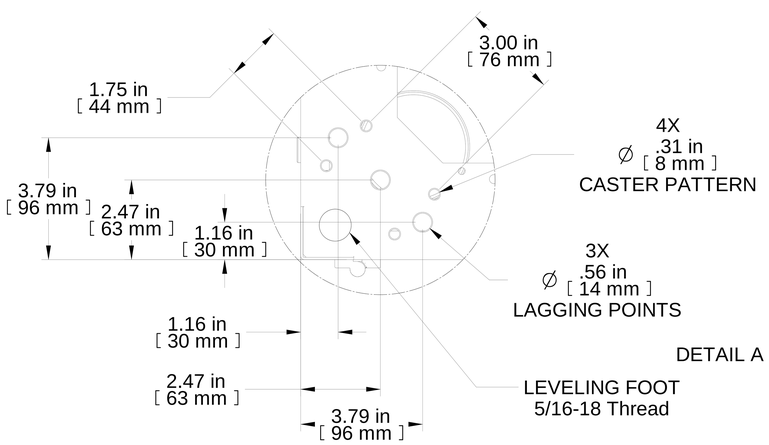

4X
DETAIL A
4:1

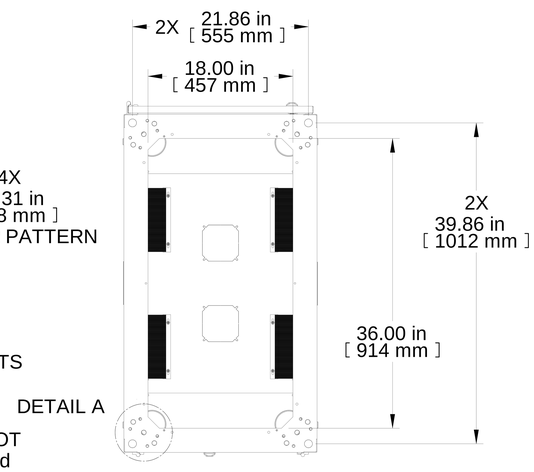

BOTTOM VIEW
BOTTOM OPENING

Item Number	Title	Quantity
1	C4 - FRAME (24X73X42)	1
2	C4 SOLID SIDE PANEL (7342) PAIR	1
3	C2 BRUSH/FAN TOP PANEL	1
4	DC100/C4F24 SQ PANEL RAIL 73 (PAIR)	2
5	C4 SURFACE VENTED DOOR	1
6	C4 VENT'D SPLIT DOOR	1

PART NUMBERS

C4RR247342ABK1	PAINTED BLACK TEXTURE

NOTES

See Hammond Website for Additional Accessories

Français

Pour tous les détails sur nos produits, svp veuillez consulter notre site www.hammondmfg.com

Data subject to change without notice. Isometric drawing not to scale.
Les données sont sujettes à changement sans préavis.

HAMMOND MANUFACTURING®

www.hammondmfg.com

PART NO. C4RR247342ABK