TOP VIEW

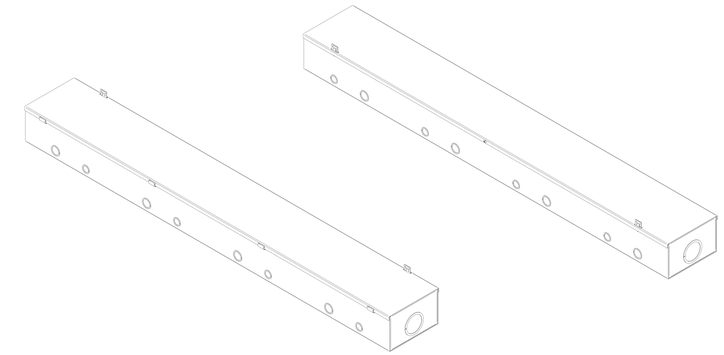

ISOMETRIC VIEWS

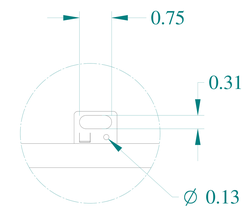

DETAIL Z
TYP

SIDE VIEW

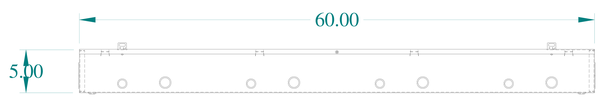

FRONT VIEW

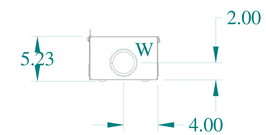

SIDE VIEW

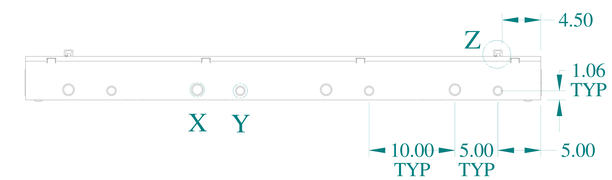

BACK VIEW

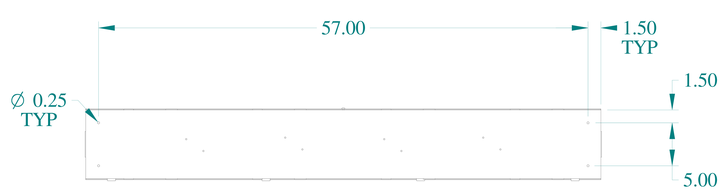

BACK VIEW

DETAIL W
TYP

DETAIL X
TYP

DETAIL Y
TYP

HAMMOND MANUFACTURING®

www.hammondmfg.com

Data subject to change without notice.

Part # : CST5200	Date : Mar. 24, 2019

Link:www.hammfg.com/CST5200