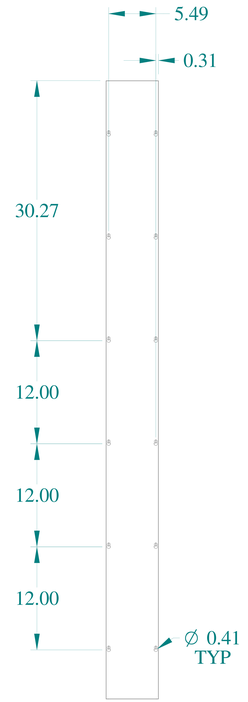

TOP VIEW

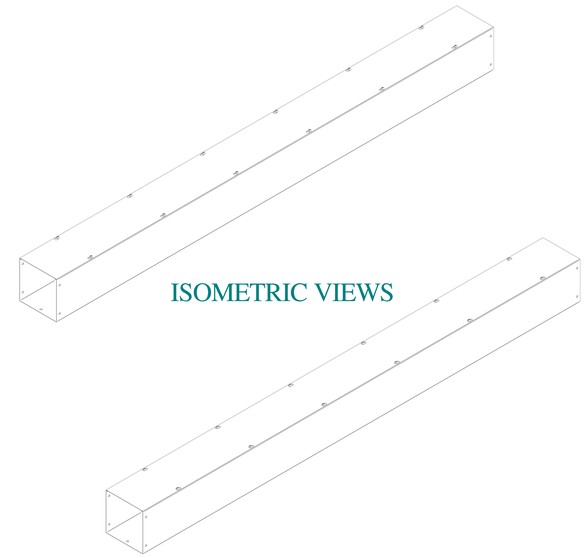

ISOMETRIC VIEWS

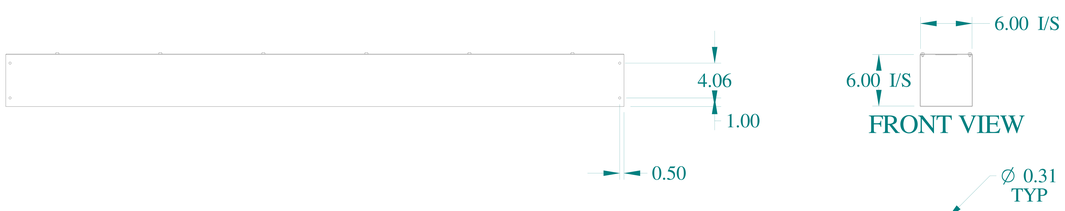

SIDE VIEW

FRONT VIEW

BACK VIEW

SIDE VIEW

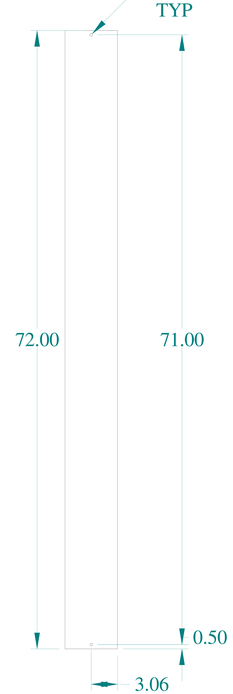

BOTTOM VIEW

HAMMOND MANUFACTURING®

www.hammondmfg.com

Data subject to change without notice.

Part # : CWSC672GNK	Date : Jan. 15, 2020

Link:www.hammfg.com/CWSC672GNK