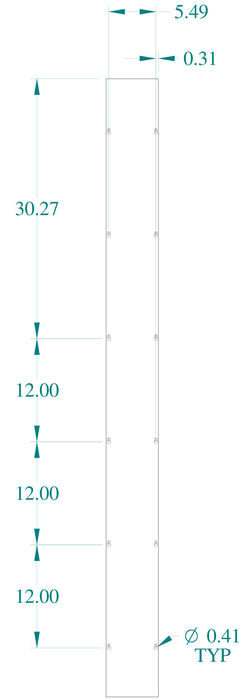

TOP VIEW

FRONT VIEW

SIDE VIEW

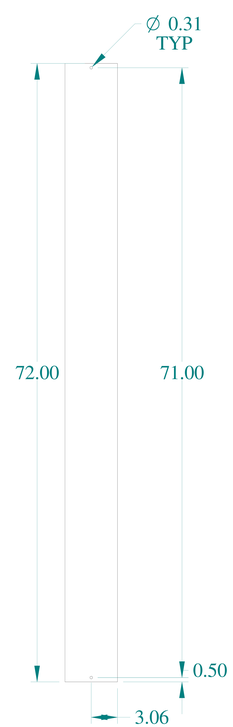

BOTTOM VIEW

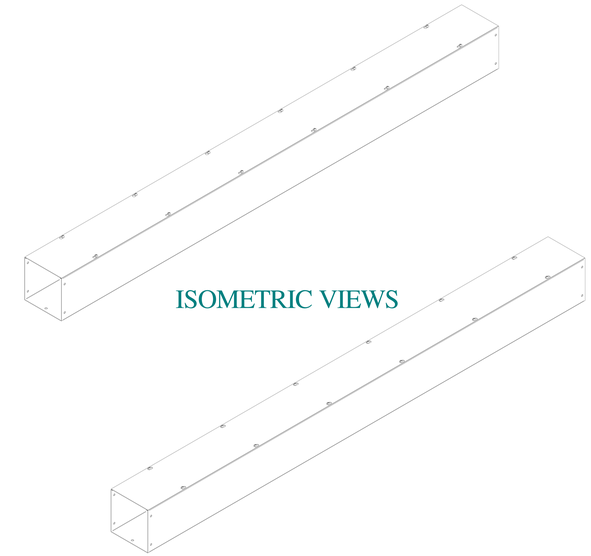

ISOMETRIC VIEWS

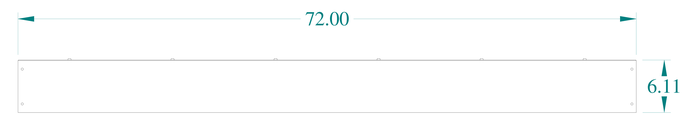

SIDE VIEW

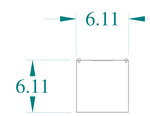

BACK VIEW

HAMMOND MANUFACTURING®

www.hammondmfg.com

Data subject to change without notice.

Part # : CWSC672NK	Date : Mar. 24, 2019

Link:www.hammfg.com/CWSC672NK