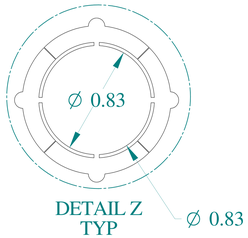

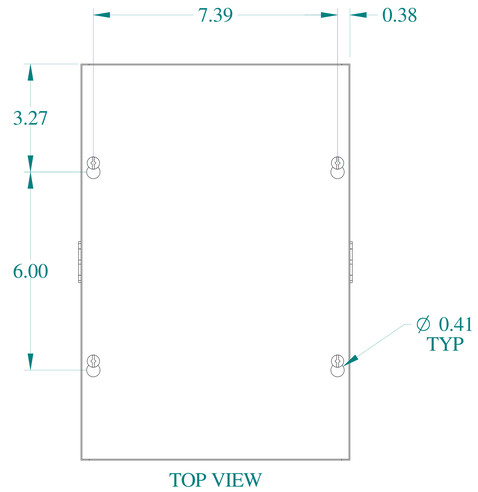

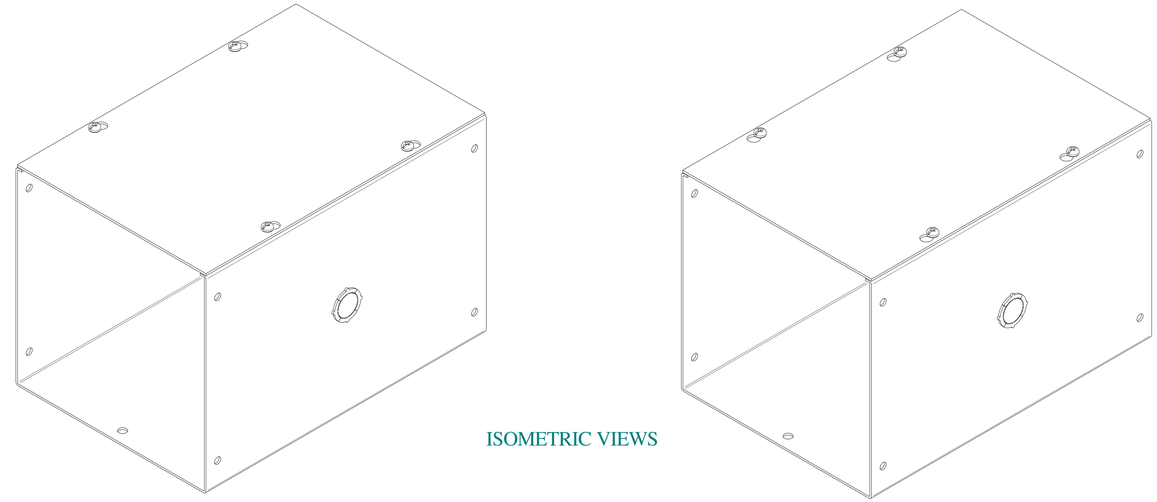

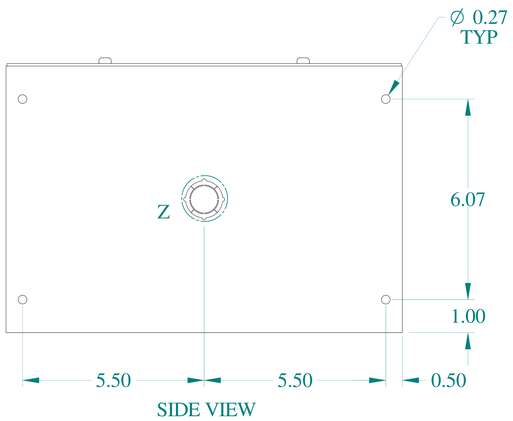

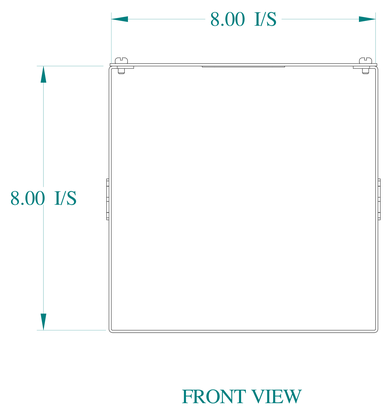

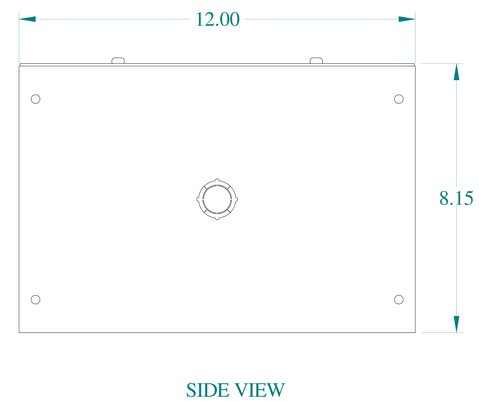

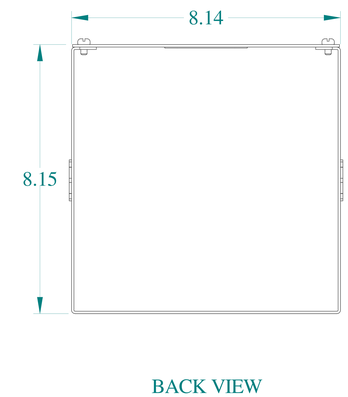

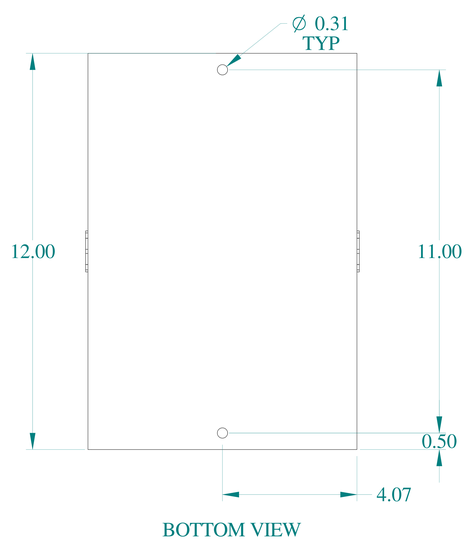

HAMMOND MANUFACTURING®

www.hammondmfg.com

Data subject to change without notice.

Part # : CWSC812	Date : Mar. 22, 2019

Link:www.hammfg.com/CWSC812