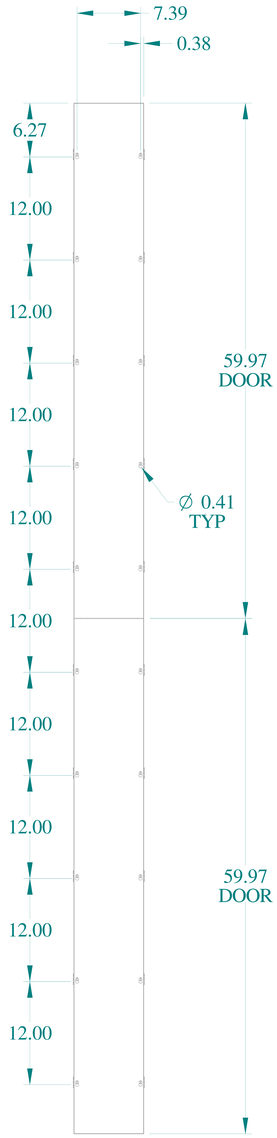

TOP VIEW

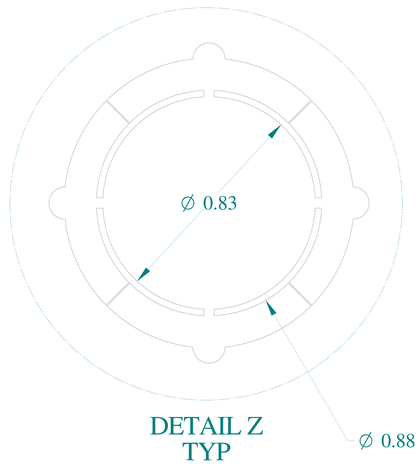

DETAIL Z
TYP

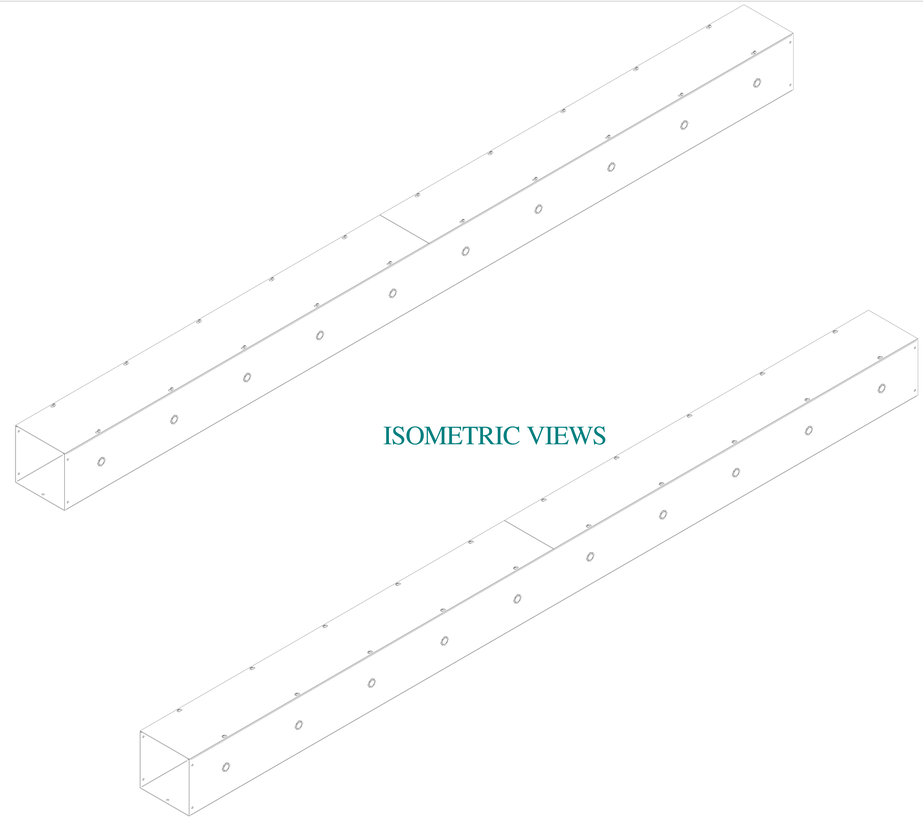

ISOMETRIC VIEWS

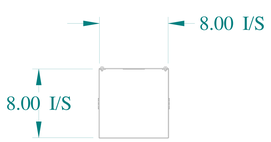

FRONT VIEW

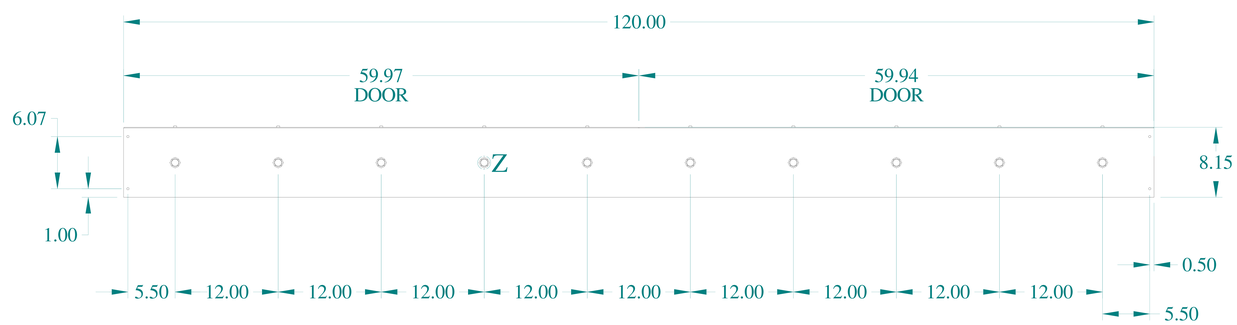

SIDE VIEW

HAMMOND MANUFACTURING®

www.hammondmfg.com

Data subject to change without notice.

Part # : CWSC8120	Date : Mar. 22, 2019

Link:www.hammfg.com/CWSC8120