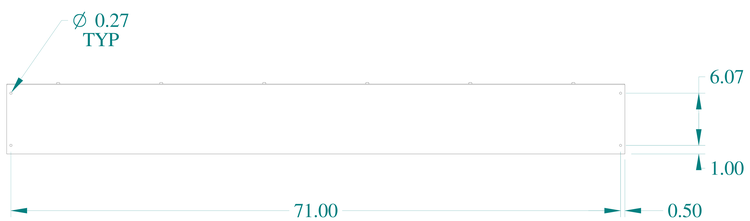

SIDE VIEW

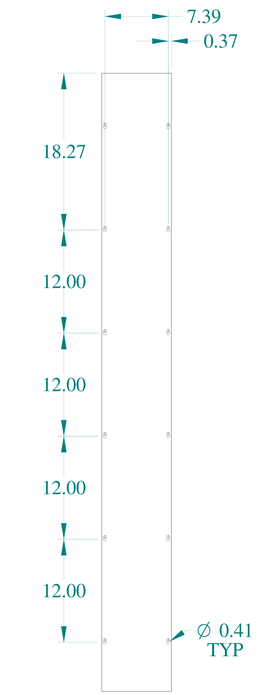

TOP VIEW

FRONT VIEW

BOTTOM VIEW

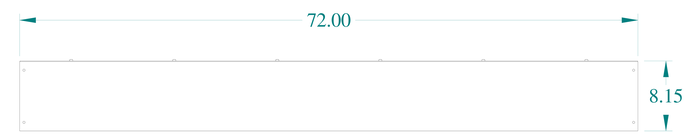

SIDE VIEW

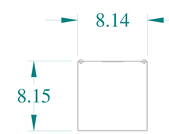

BACK VIEW

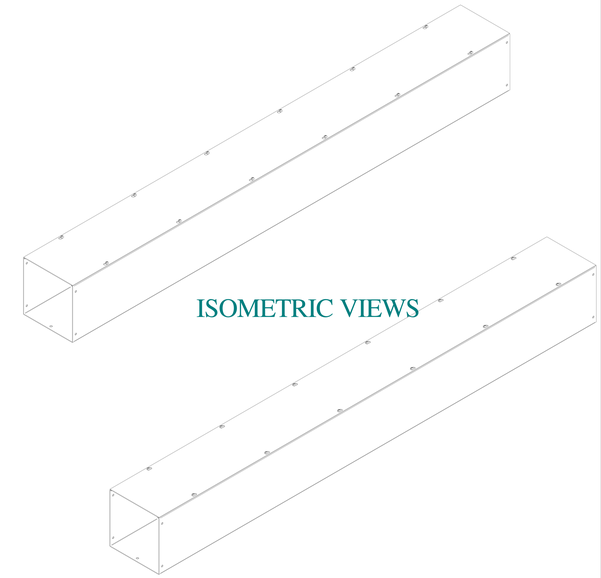

ISOMETRIC VIEWS

HAMMOND MANUFACTURING®

www.hammondmfg.com

Data subject to change without notice.

Part # : CWSC872NK	Date : Mar. 24, 2019

Link:www.hammfg.com/CWSC872NK