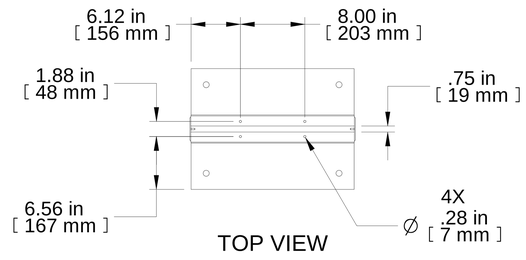

TOP VIEW

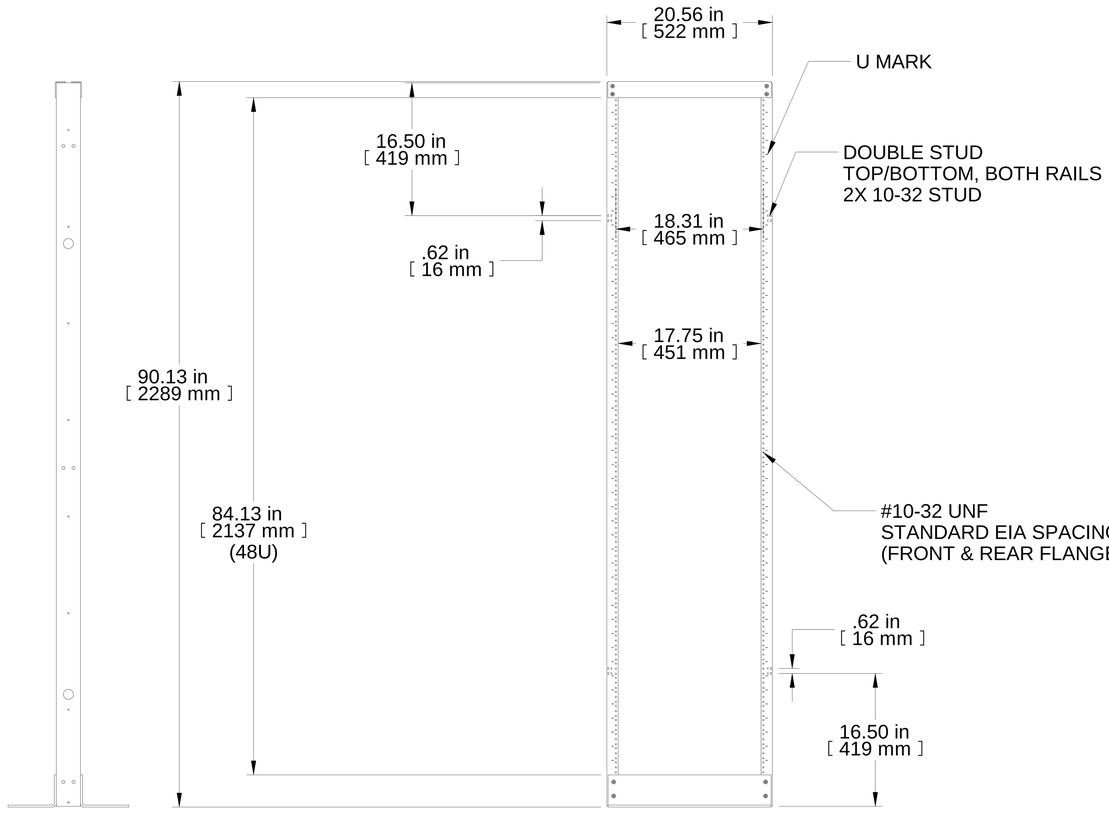

L.S. VIEW

FRONT VIEW

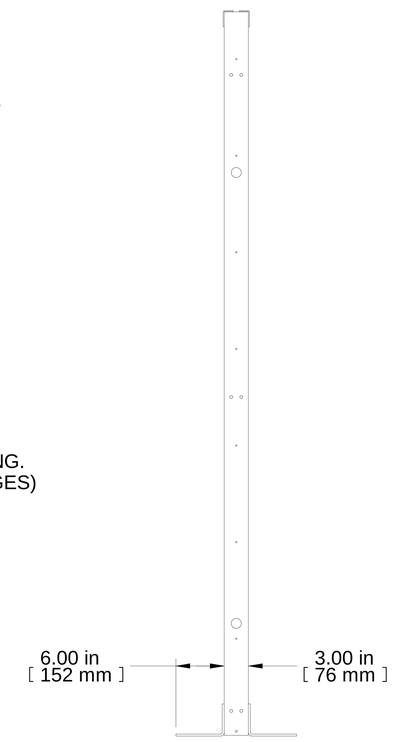

R.S. VIEW

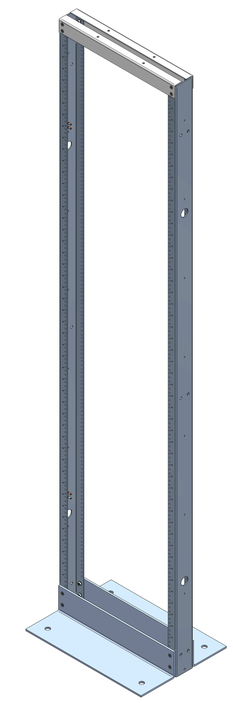

ISOMETRIC

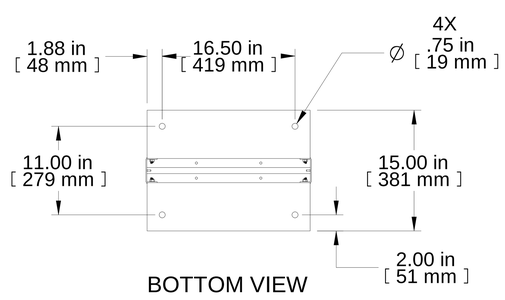

BOTTOM VIEW

Item Number	Title	Quantity
1	DC4R - BASE ANGLE	2
2	DNRR - RAIL W/ DOUBLE STUDS	2
3	DC4R TOP ANGLE	2
4	SCREW 1/4-20 x 3/4 FH PH	16
5	NUT 1/4-20 KEP	16

PART NUMBERS

DNRR84HDKB	PAINTED BLACK THIN FILM

NOTES

Shipped knockdown for handling ease & protection.
Ease of assembly with self centering hardware.
Includes assembly hardware.
See Hammond Website for Additional Accessories.

Français

Pour tous les détails sur nos produits, svp veuillez consulter notre site www.hammondmfg.com

Data subject to change without notice. Isometric drawing not to scale.
Les données sont sujettes à changement sans préavis.

HAMMOND MANUFACTURING®

www.hammondmfg.com

PART NO. **DNRR84HDKB**