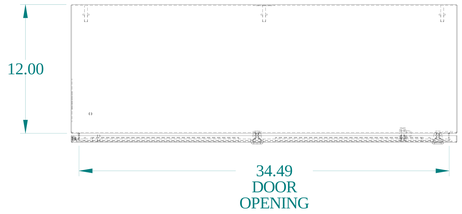

TOP VIEW

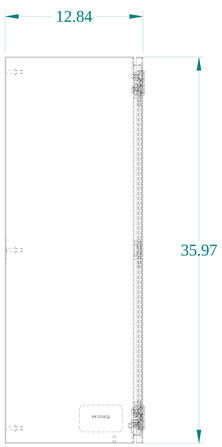

SIDE VIEW

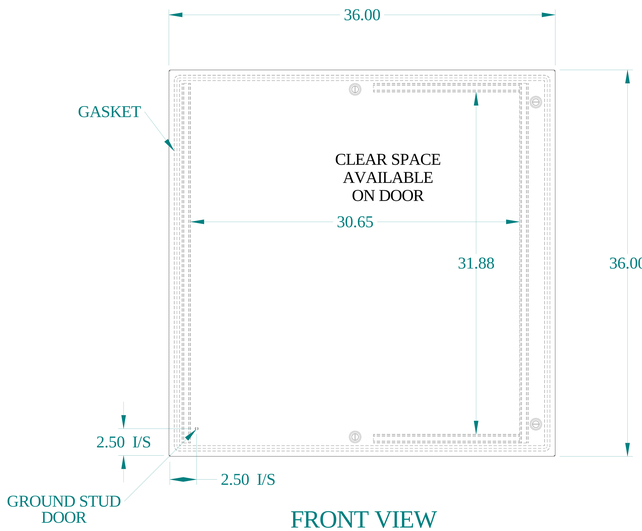

FRONT VIEW

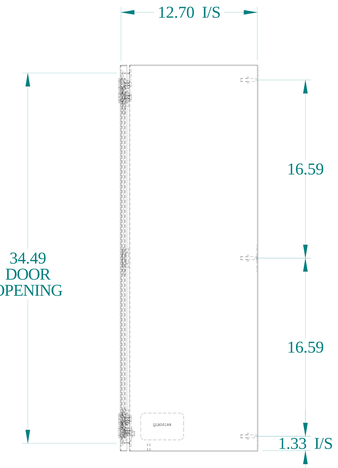

SIDE VIEW

BACK VIEW

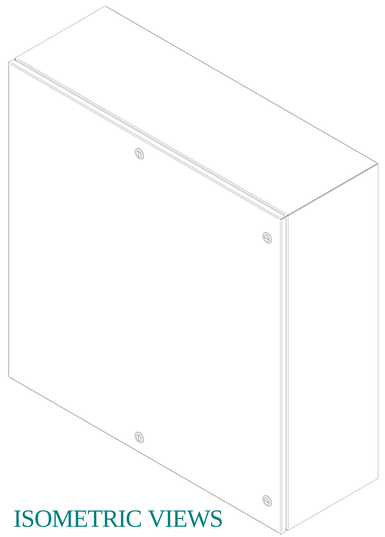

ISOMETRIC VIEWS

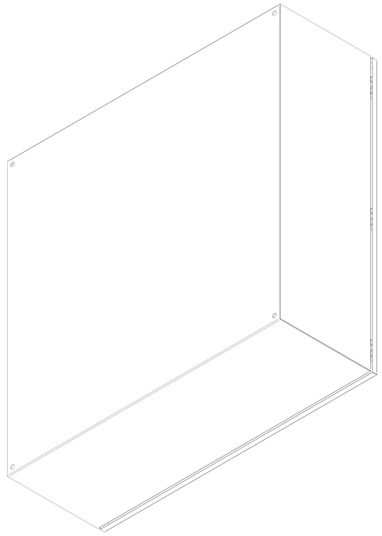

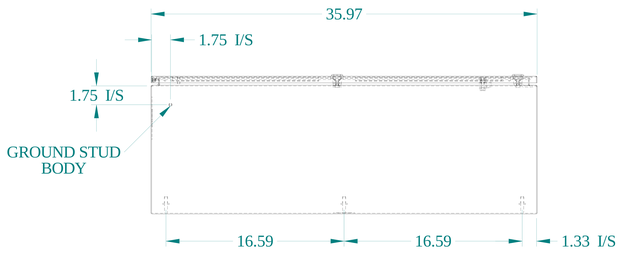

BOTTOM VIEW

HAMMOND MANUFACTURING®

www.hammondmfg.com

Data subject to change without notice.

Part # : EN4SD363612S16R	Date : Mar. 20, 2023

Link:www.hammfg.com/EN4SD363612S16R