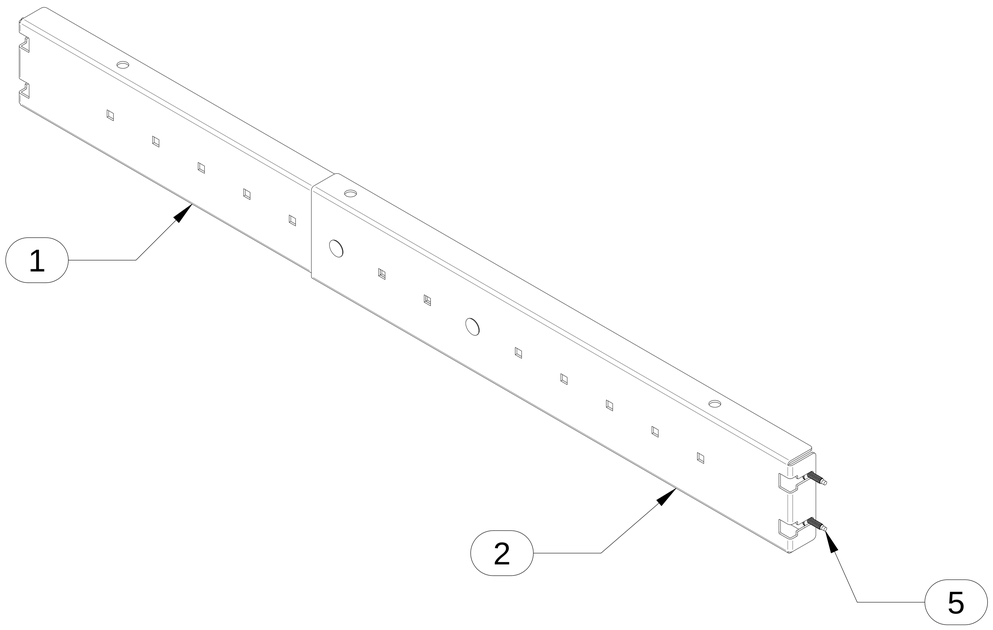

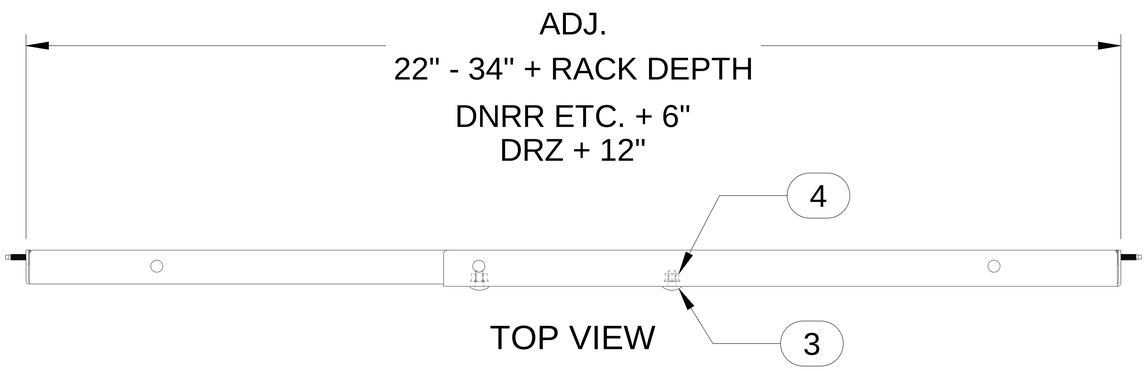

TOP VIEW

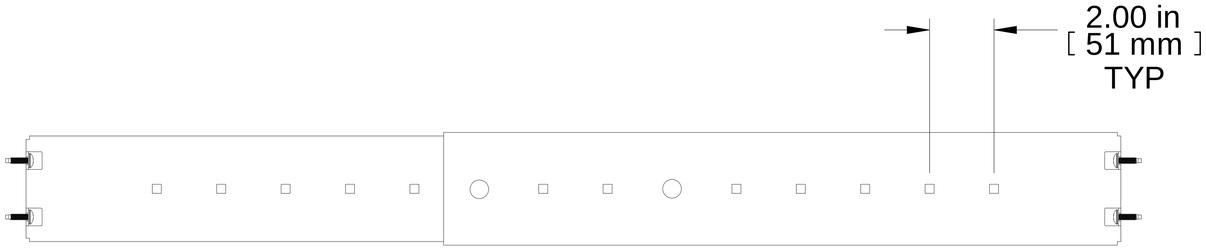

FRONT VIEW

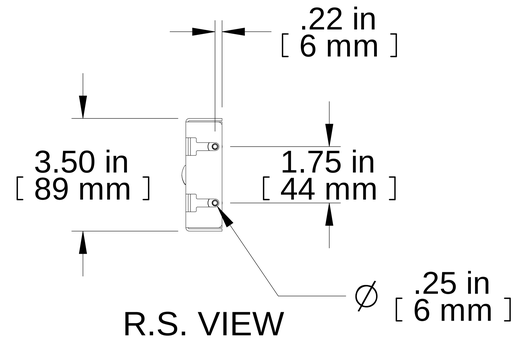

R.S. VIEW

Item Number	Title	Quantity
1	2 TO 4 POST 22-34 INNER BRACKET	1
2	2 TO 4 POST 22-34 OUTER BRACKET	1
3	SCREW 1/4-20 X 1/2 CARR. BOLT	2
4	NUT 1/4-20 KEP	2
5	10-32 X 3/4 QUADREX TRUSS PH	4

PART NUMBERS

FPRK2234BK	PAINTED BLACK

NOTES

Notes
Hardware included
Sold as a set of 4

See Hammond Website for additional info.

Français

Pour tous les détails sur nos produits,
svp veuillez consulter notre site www.hammondmfg.com

Data subject to change without notice. Isometric drawing not to scale.
Les données sont sujettes à changement sans préavis.

HAMMOND MANUFACTURING®

www.hammondmfg.com

PART NO. **FPRK2234BK**