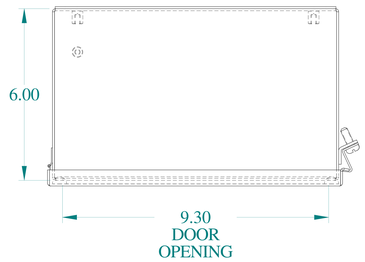


TOP VIEW

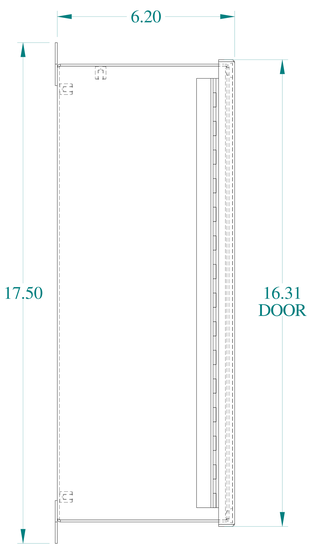


SIDE VIEW

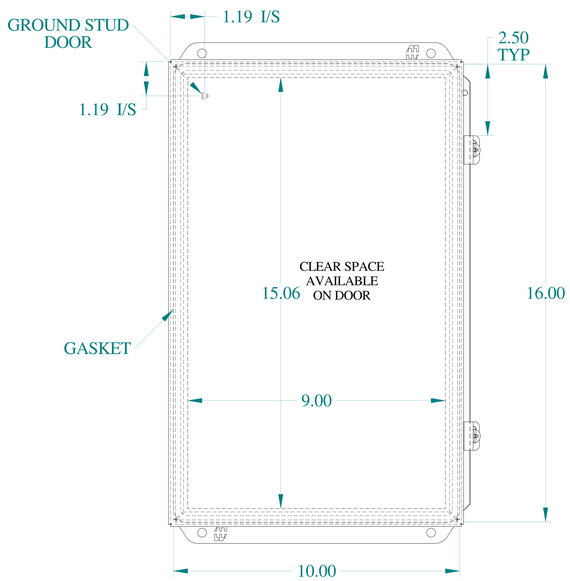


FRONT VIEW

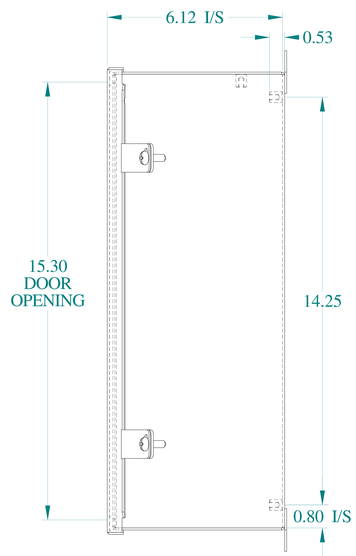


SIDE VIEW

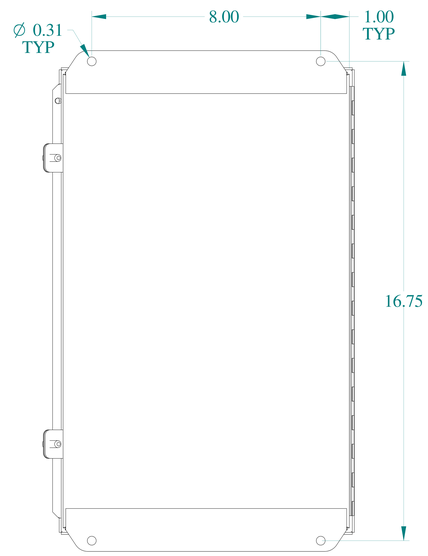


BACK VIEW

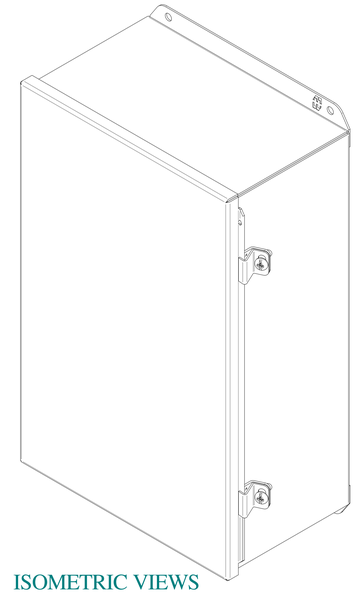

ISOMETRIC VIEWS

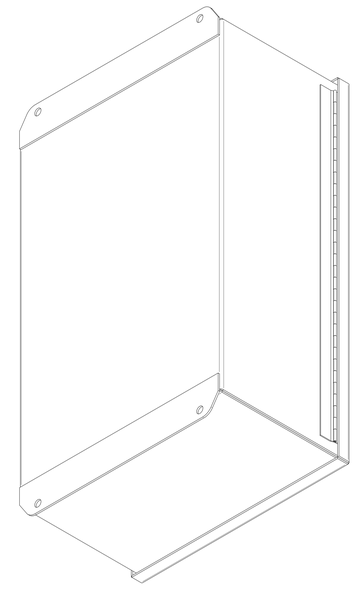

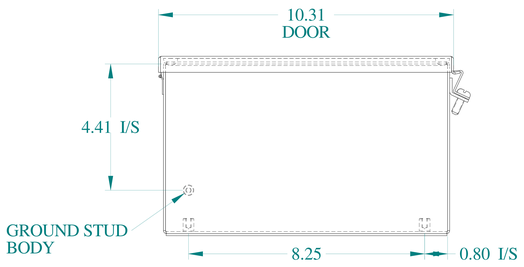


BOTTOM VIEW

HAMMOND MANUFACTURING®

www.hammondmfg.com

Data subject to change without notice.

| | |
|---|---|
| Part # : HJ16106HLP | Date : Apr. 2, 2019 |

Link:www.hammfg.com/HJ16106HLP