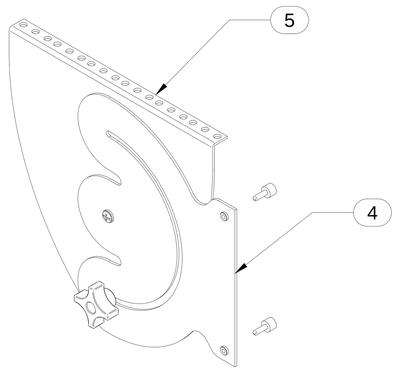


ROTATING RAIL ASSEMBLY
2:1

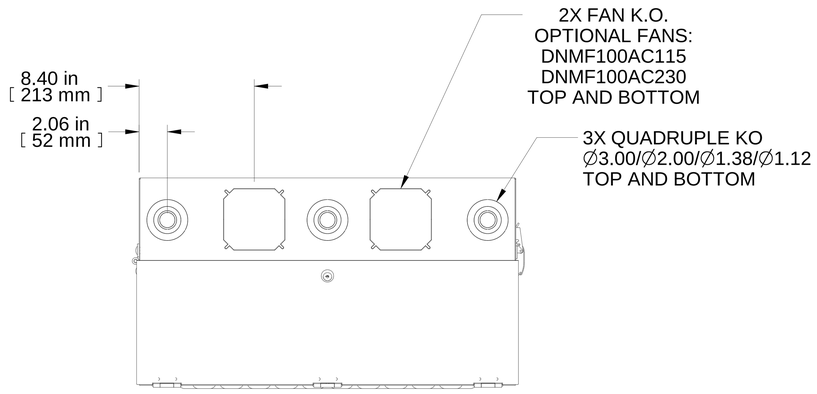


TOP VIEW

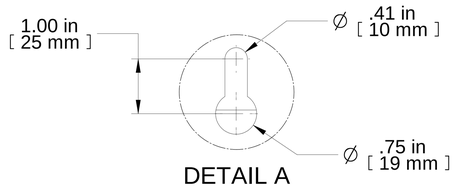


DETAIL A
4:1

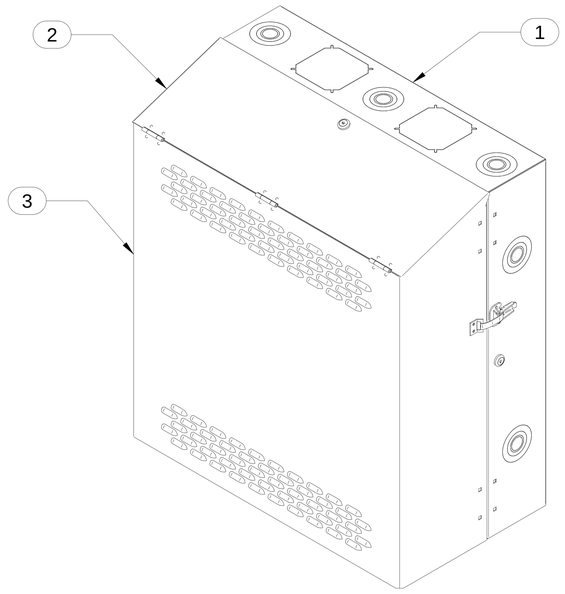


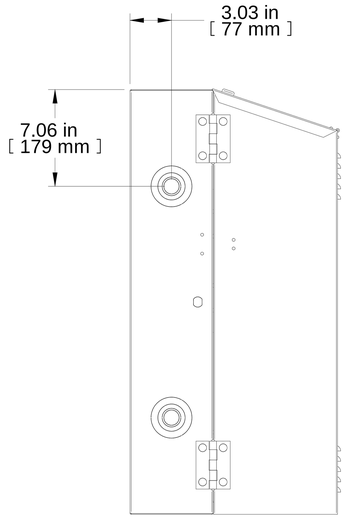


L.S. VIEW

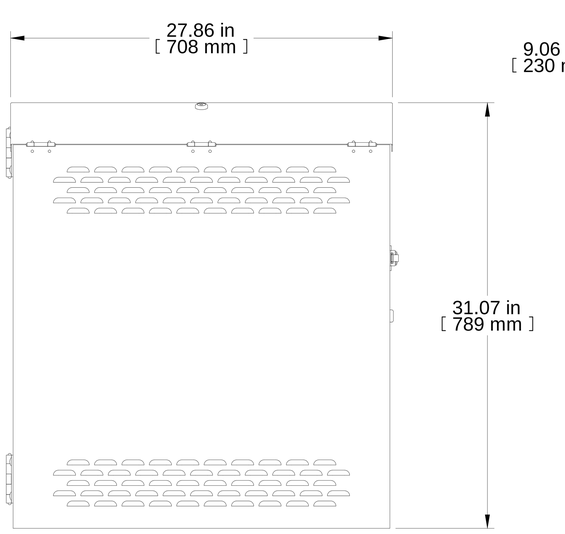


FRONT VIEW

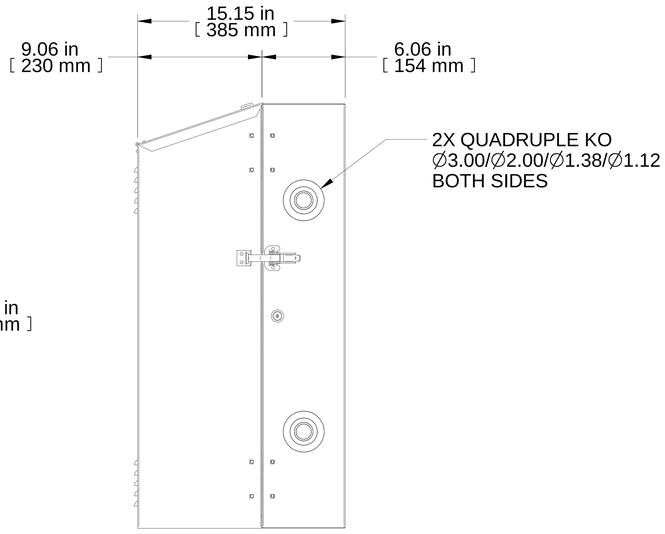


R.S. VIEW

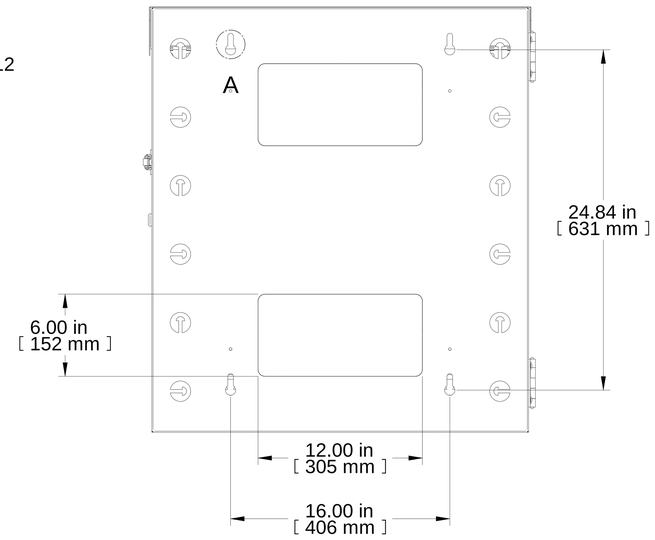


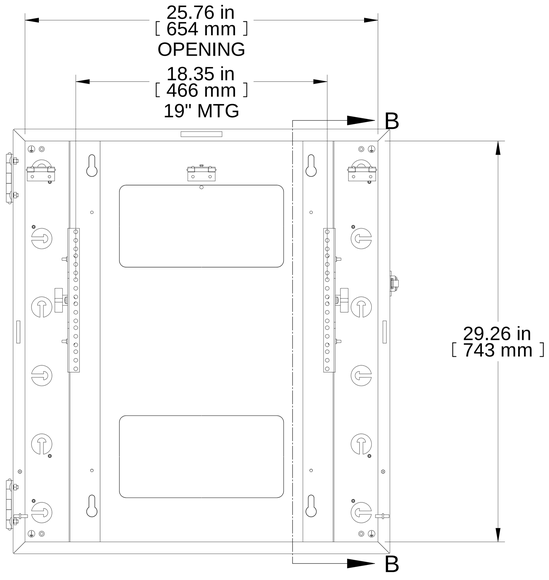


FRONT VIEW
DOOR REMOVED

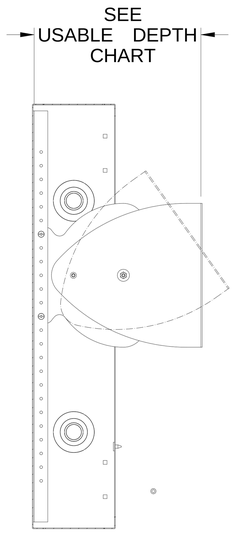


SECTION B-B

| USABLE MOUNTING DEPTH | |
|---|---|
| **POSITION** | **DEPTH** |
| VERTICAL | 29.00 |
| HORIZONTAL | 12.00 |
| ROTATING | 9.50 |

| Item Number | Title | Quantity |
|---|---|---|
| 1 | HLP - REAR SECTION | 1 |
| 2 | HLP - LID | 1 |
| 3 | HLP - 6U LID BODY | 1 |
| 4 | HLP - ROTATING 6U BRACKET | 2 |
| 5 | HLP - ROTATING 6U RAIL | 2 |

**PART NUMBERS**

| | |
|---|---|
| HLP6UBK | PAINTED BLACK TEXTURED |

**NOTES**

Louvered Front Door
Wall Mounting Hardware Not Included
See Hammond Website for More Information

**Français**

Pour tous les détails sur nos produits,
svp veuillez consulter notre site www.hammondmfg.com

Data subject to change without notice. Isometric drawing not to scale.
Les données sont sujettes à changement sans préavis.

HAMMOND MANUFACTURING®
www.hammondmfg.com

**PART NO.** **HLP6UBK**