TOP VIEW

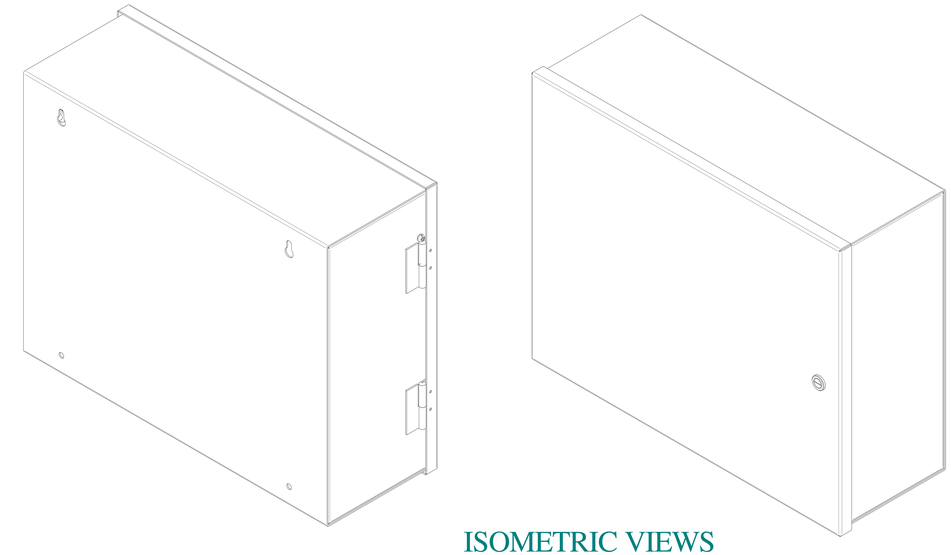

ISOMETRIC VIEWS

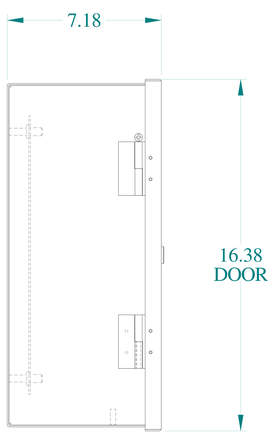

SIDE VIEW

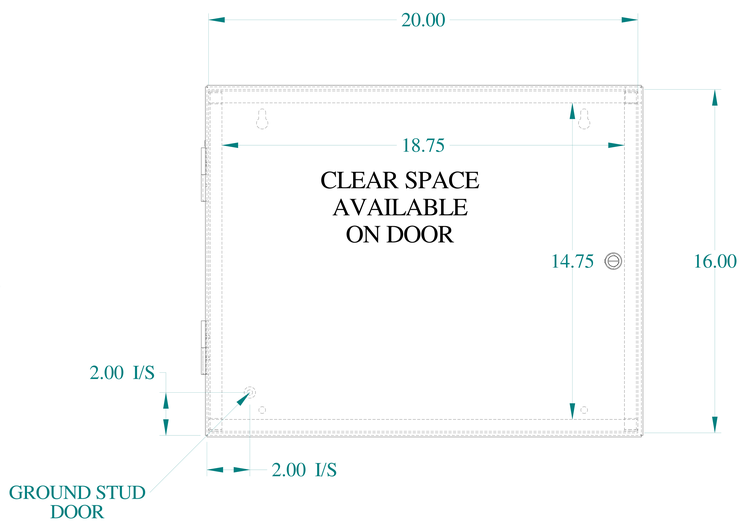

TOP VIEW

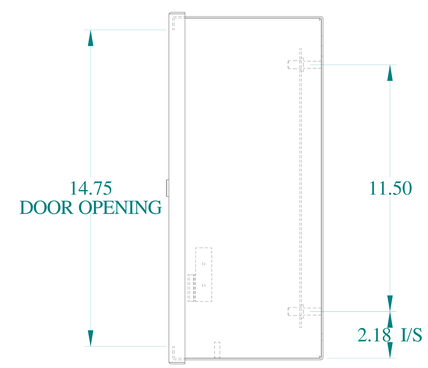

SIDE VIEW

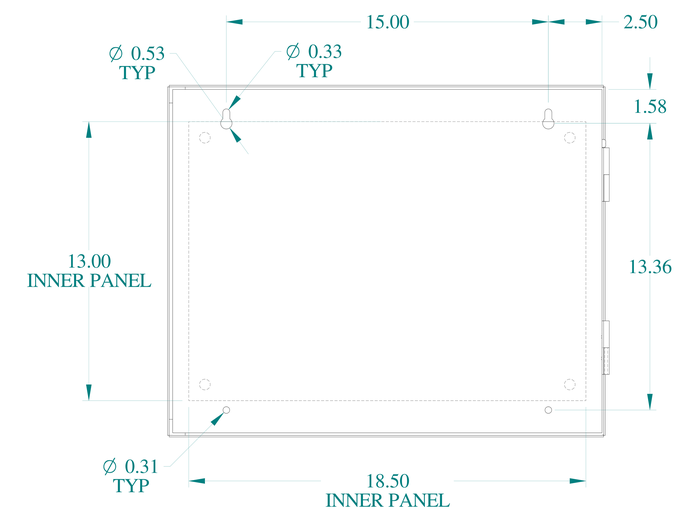

BACK VIEW

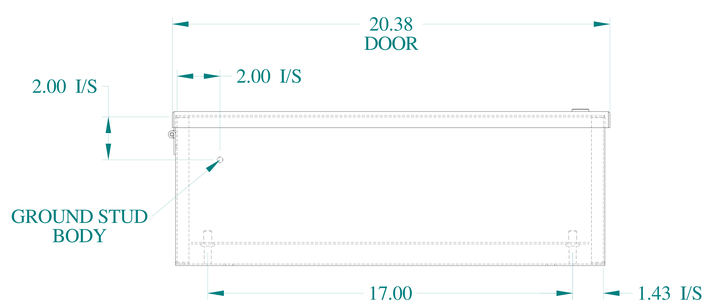

BOTTOM VIEW

HAMMOND MANUFACTURING®

www.hammondmfg.com

Data subject to change without notice.

Part # : N1A16207	Date : Mar. 24, 2019

Link:www.hammfg.com/N1A16207