TOP VIEW

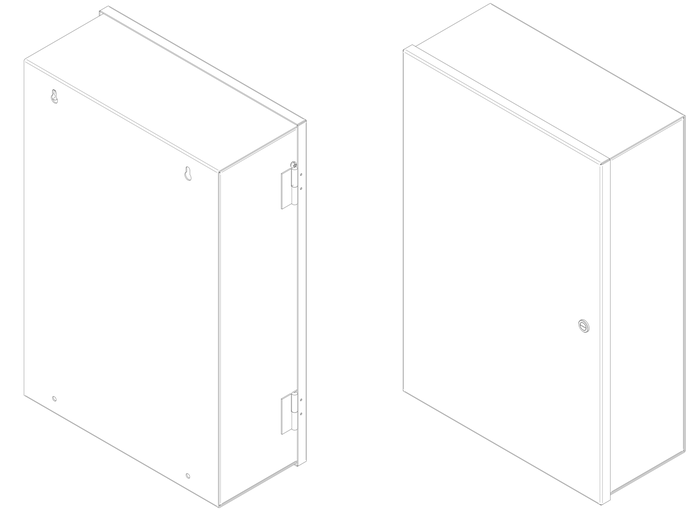

ISOMETRIC VIEWS

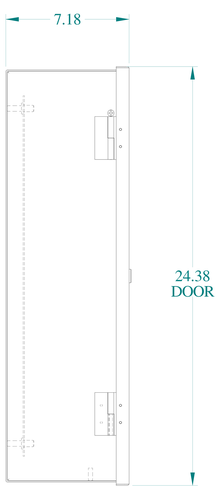


SIDE VIEW

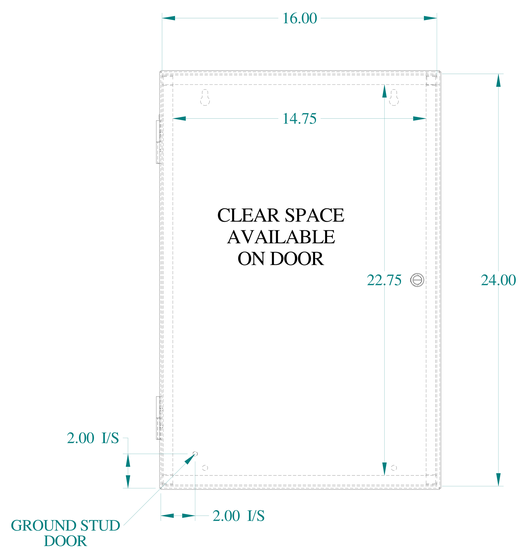


TOP VIEW

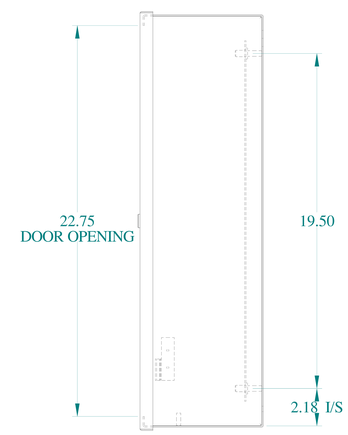


SIDE VIEW

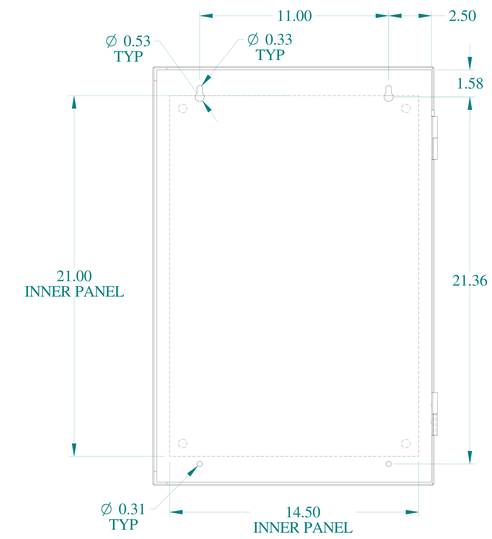


BACK VIEW

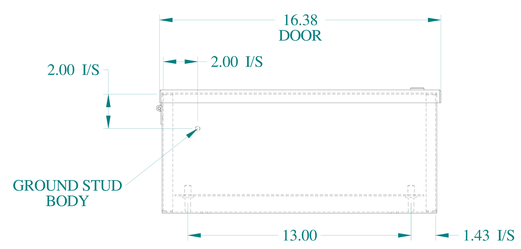


BOTTOM VIEW

HAMMOND MANUFACTURING®

www.hammondmfg.com

Data subject to change without notice.

| | |
|---|---|
| Part # : N1A24167 | Date : Mar. 24, 2019 |

Link:www.hammfg.com/N1A24167