DIMENSIONS:	
A	8.000" ±0.063
B	7.813" ±0.250
C1	8.625" ±0.125
C2	7.125" ±0.125
D	5.500" ±0.125
E	3.937" ±0.063
F	4.813" ±0.063
G	0.281" X 0.563" ±0.015

APPROXIMATE WEIGHT: 46 LBS

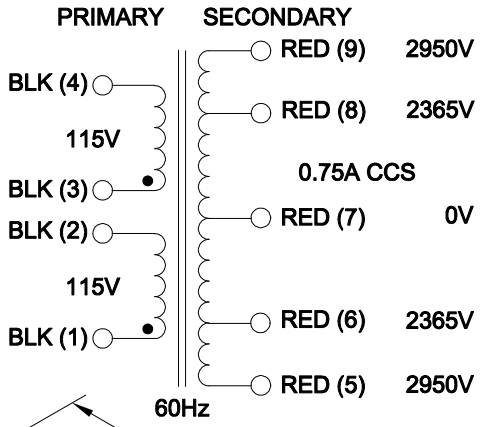

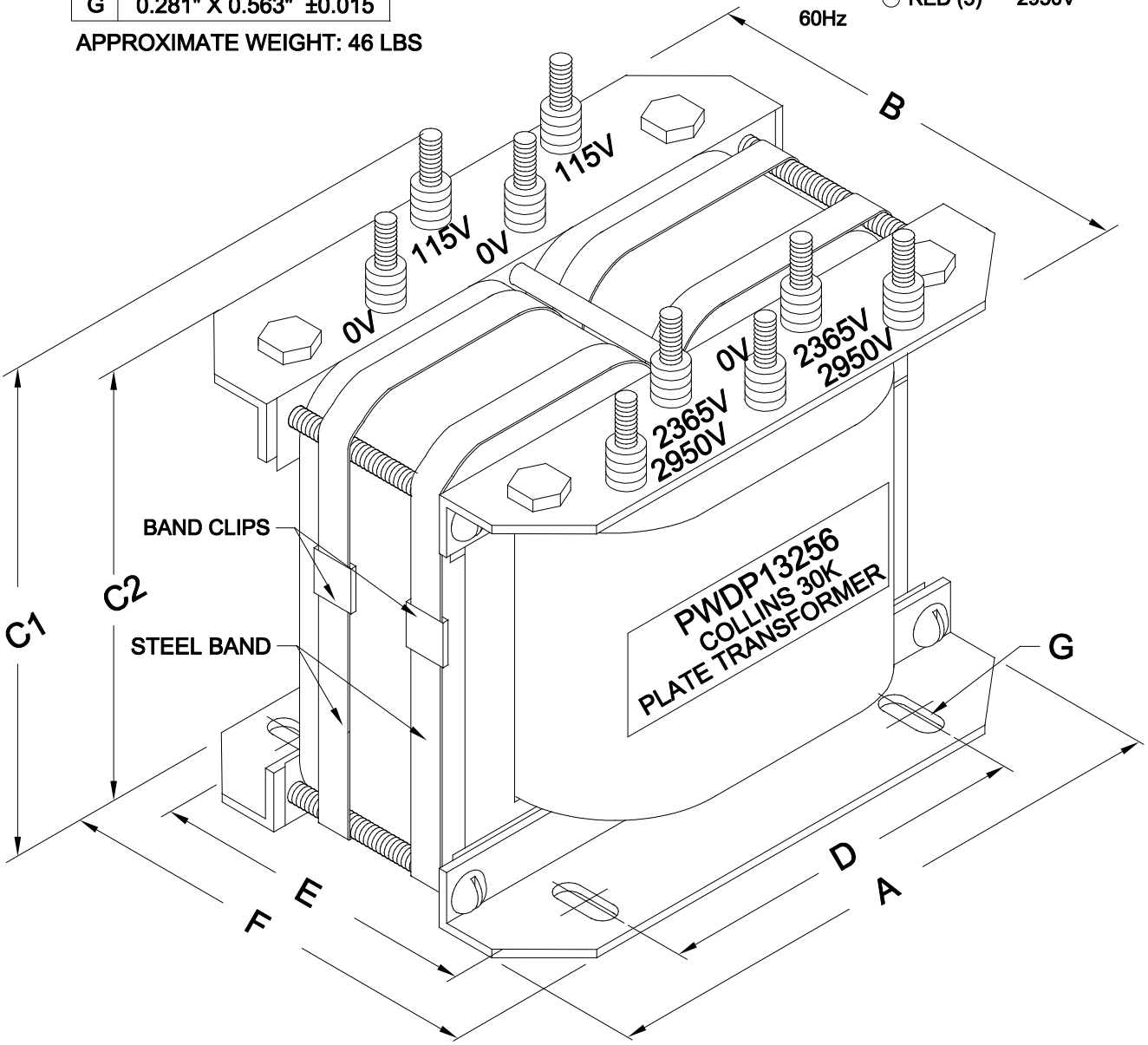

HAMMOND MANUFACTURING T.M.

ELECTRONIC DIVISION
52 RANKIN PLACE,
WATERLOO, ONTARIO, N2J 3Z5
PH # (519) 886-6181
FAX # (519) 886-9540

TITLE
COLLINS 30K
4-125A RF PA & PP 75T MODULATORS
PLATE TRANSFORMER

NO	DATE	REVISION		DWG. BY
0	01/04/22	RELEASED.	C.I.	C. ILIE
				DATE
				01/04/22
				DIM IN(X)MM( )

PWDP13256