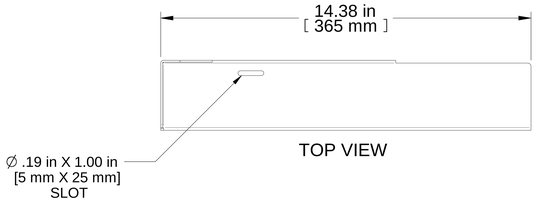

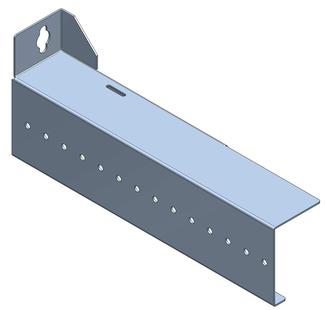

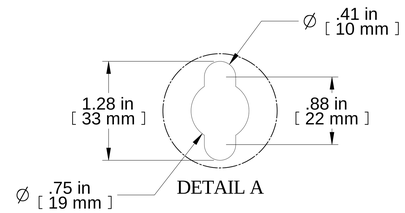

LEFT BRACKET

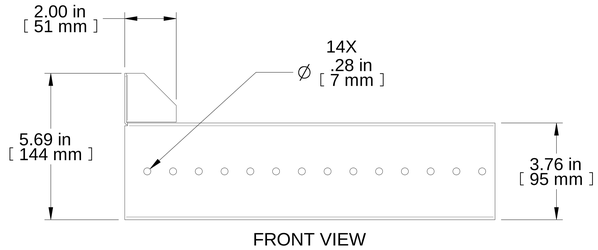

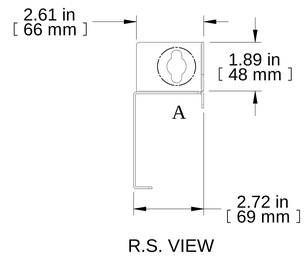

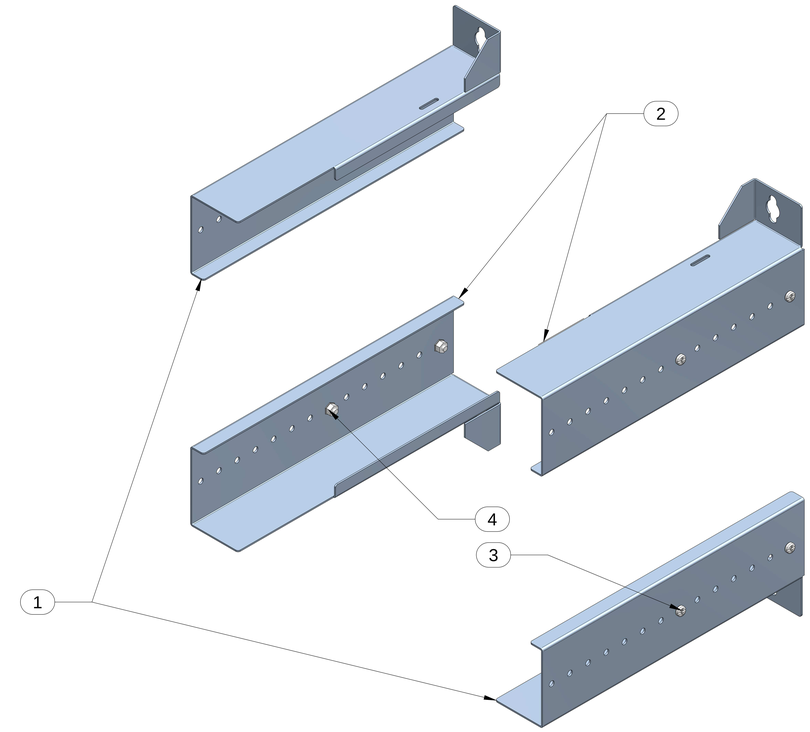

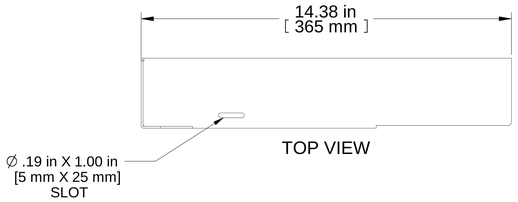

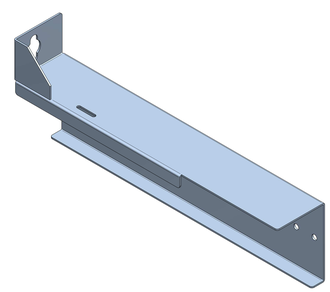

RIGHT BRACKET

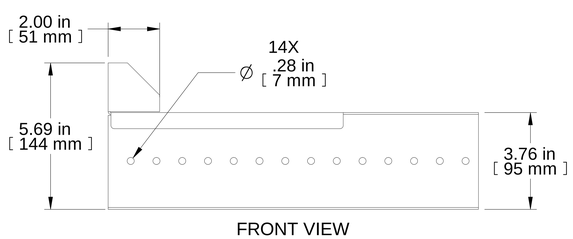

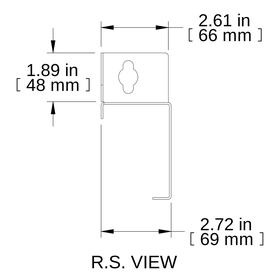

Item Number	Title	Quantity
1	RB-2PW - SUPPORT EXTENSION LH	2
2	RB-2PW - SUPPORT EXTENSION RH	2
3	SCREW 1/4-20 X 1/2	8
4	NUT 1/4-20 KEP	8

PART NUMBERS

RB-2PW-EXT	PAINTED BLACK THIN FILM

NOTES

Includes: 4 Extension Brackets (2L + 2R)
Wall Mounting Hardware NOT Included
Assembly Hardware Included
Mounting Holes Centers 16" When Installed
See Hammond Website for More Information

Français

Pour tous les détails sur nos produits, svp veuillez consulter notre site www.hammondmfg.com

Data subject to change without notice. Isometric drawing not to scale.
Les données sont sujettes à changement sans préavis.

RACK BASICS®

www.hammondmfg.com

PART NO. **RB-2PW-EXT**