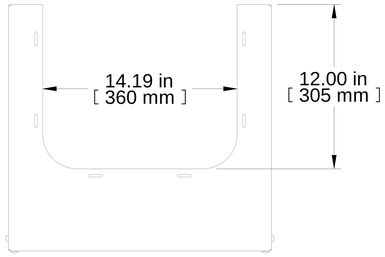


TOP VIEW

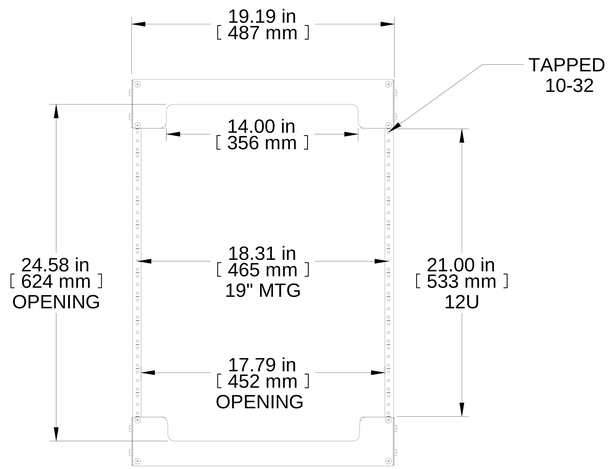


FRONT VIEW

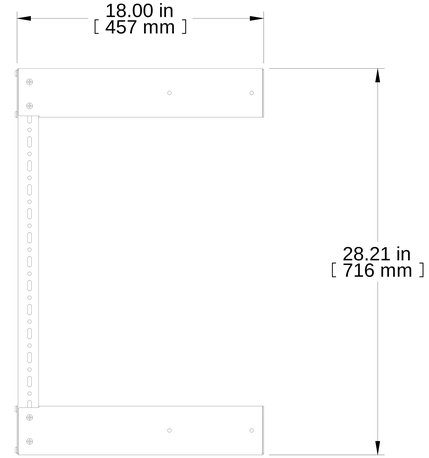


R.S. VIEW

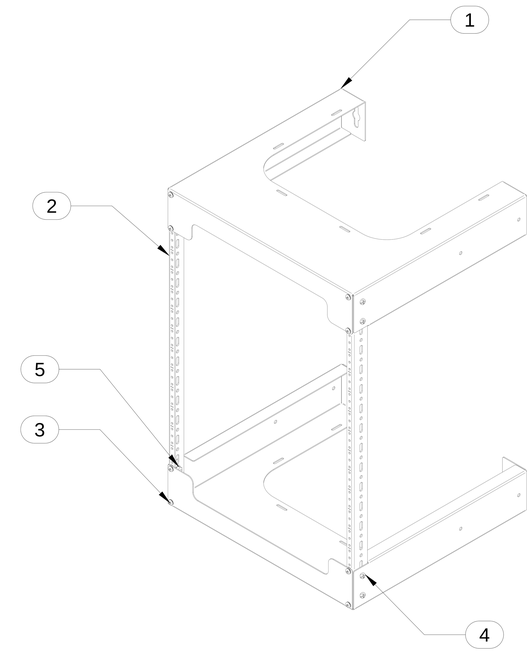


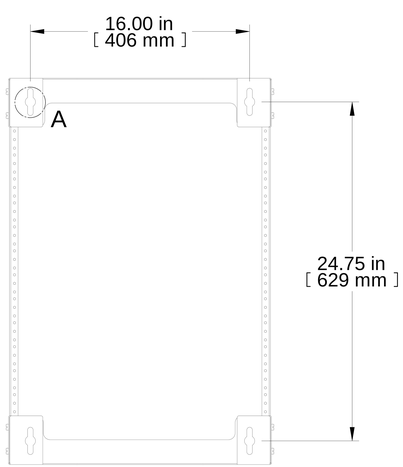


REAR VIEW
WALL MOUNT DIMENSIONS

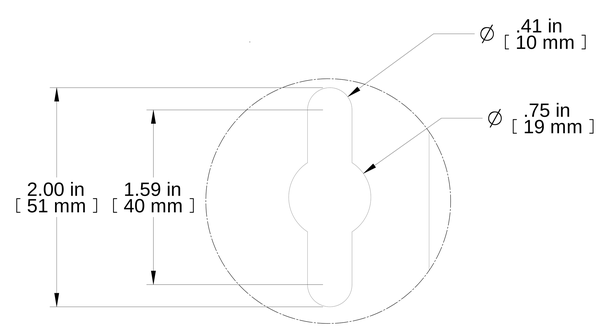


DETAIL A
MOUNTING HOLES
TYP 4 PLACES

| Item Number | Title | Quantity |
|---|---|---|
| 1 | RB-2PW - TOP/BTM BRACKET | 2 |
| 2 | URR RAIL | 2 |
| 3 | SCREW 10-32 X .75" DGP W/WASHER | 8 |
| 4 | SCREW 1/4-20 X 1/2 | 8 |
| 5 | NUT 1/4-20 KEP | 8 |

| PART NUMBERS | |
|---|---|
| RB-2PW12 | PAINTED BLACK THIN FILM |

**NOTES**

Mounting Hardware NOT Included
Shipped Knock-down, Assembly Hardware Included
See Hammond Website for More Information

**Français**

Pour tous les détails sur nos produits, svp veuillez consulter notre site www.hammondmfg.com

Data subject to change without notice. Isometric drawing not to scale.
Les données sont sujettes à changement sans préavis.

RACK BASICS®

www.hammondmfg.com

**PART NO.** **RB-2PW12**