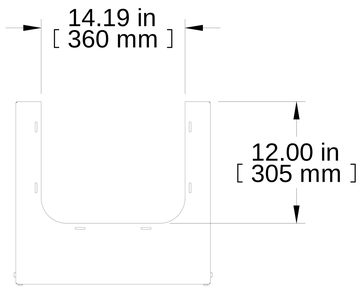

TOP VIEW

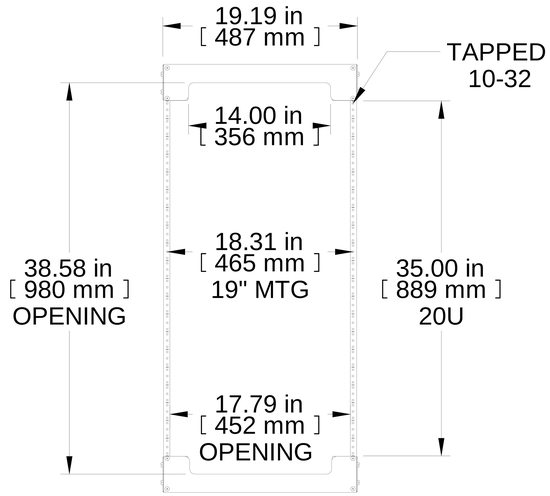

FRONT VIEW

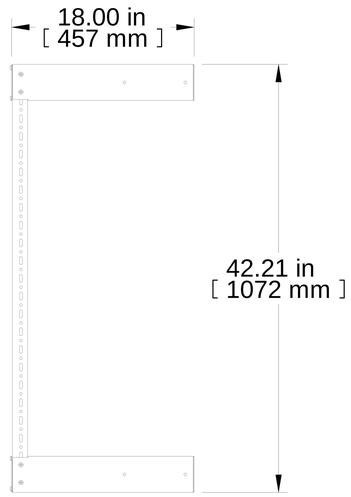

R.S. VIEW

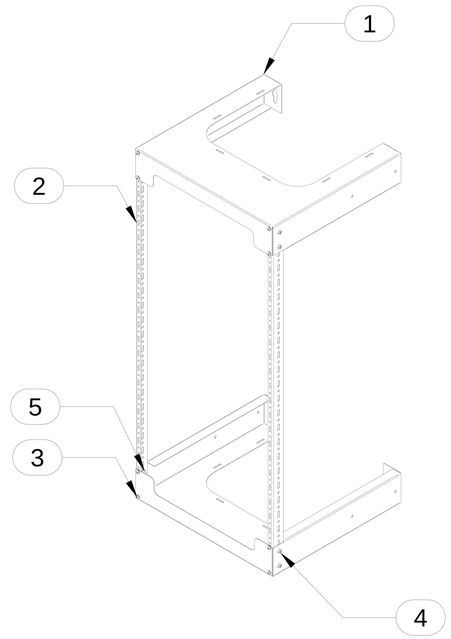

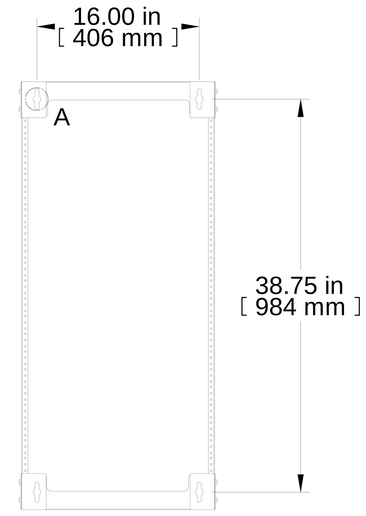

REAR VIEW
WALL MOUNT DIMENSIONS

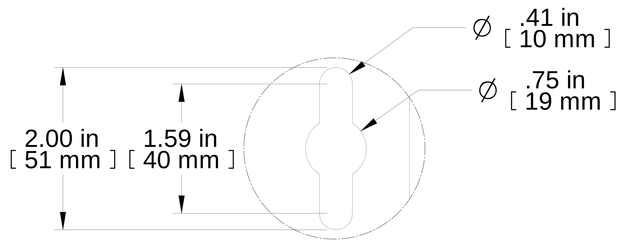

DETAIL A
MOUNTING HOLES
TYP 4 PLACES

Item Number	Title	Quantity
1	RB-2PW - TOP/BTM BRACKET	2
2	URR RAIL	2
3	SCREW 10-32 X .75" DGP W/WASHER	8
4	SCREW 1/4-20 X 1/2	8
5	NUT 1/4-20 KEP	8

PART NUMBERS	
RB-2PW20	PAINTED BLACK THIN FILM

NOTES

Mounting Hardware NOT Included
Shipped Knock-down, Assembly Hardware Included
See Hammond Website for More Information

Français

Pour tous les détails sur nos produits, svp veuillez consulter notre site www.hammondmfg.com

Data subject to change without notice. Isometric drawing not to scale.
Les données sont sujettes à changement sans préavis.

RACK BASICS®

www.hammondmfg.com

PART NO. **RB-2PW20**