TOP VIEW

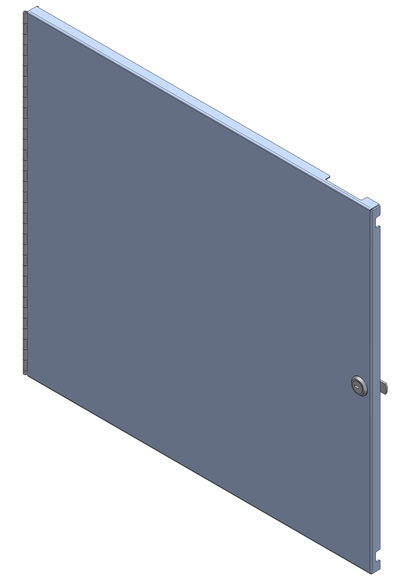

ISOMETRIC

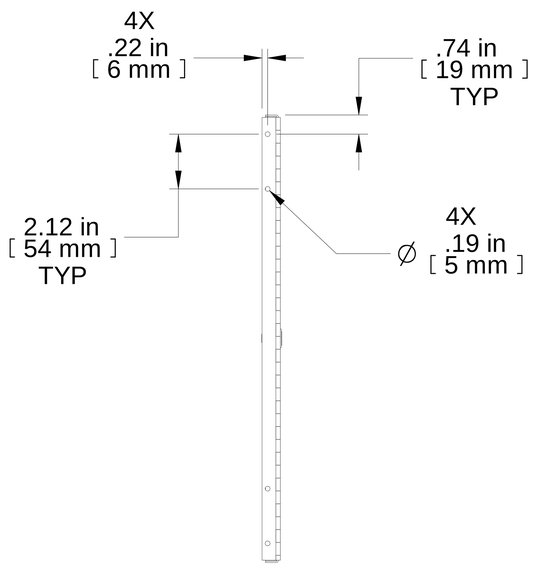

L.S. VIEW

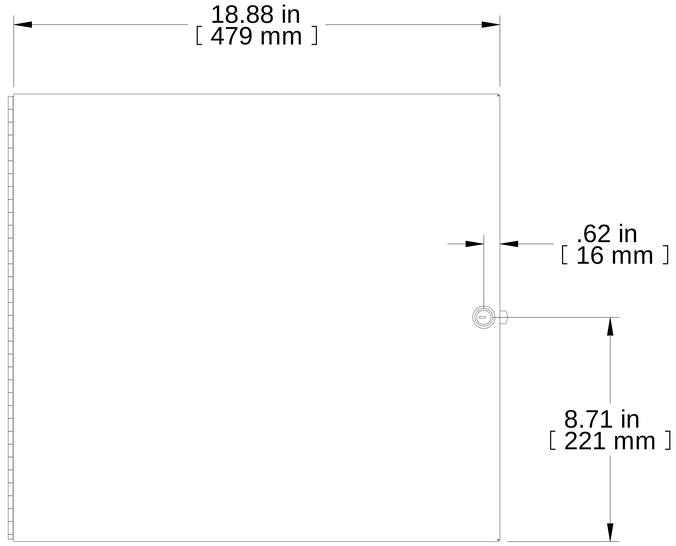

FRONT VIEW

R.S. VIEW

PART NUMBERS	
RCHD1917BK1	PAINTED BLACK TEXTURED
RCHD1917LG1	PAINTED RAL7035 GRAY TEXTURED

NOTES

Mounting Hardware Included
See Hammond Website for More Information

Français

Pour tous les détails sur nos produits,
svp veuillez consulter notre site www.hammondmfg.com

Data subject to change without notice. Isometric drawing not to scale.
Les données sont sujettes à changement sans préavis.

HAMMOND MANUFACTURING®

www.hammondmfg.com

PART NO. **RCHD1917**