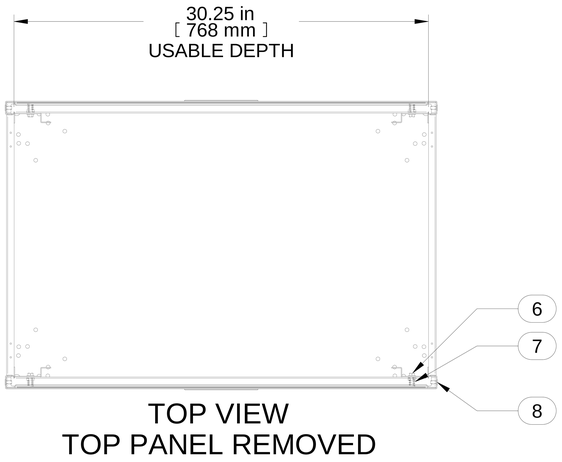

TOP VIEW
TOP PANEL REMOVED

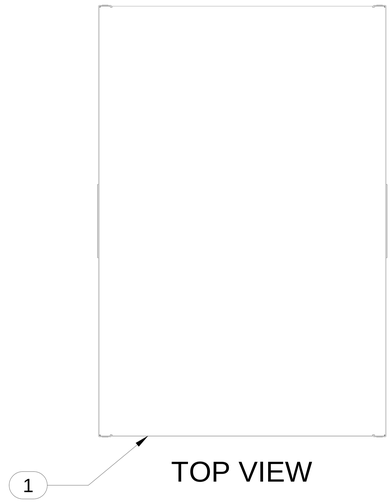

TOP VIEW

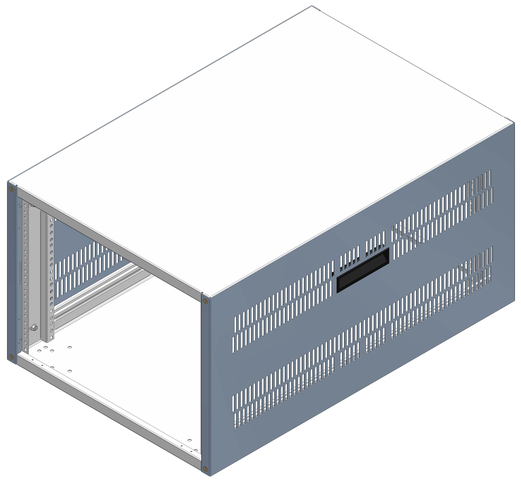

ISOMETRIC

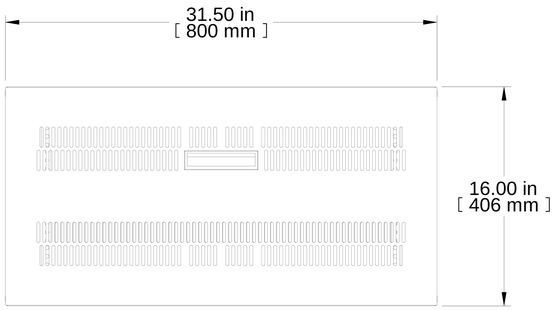

L.S. VIEW

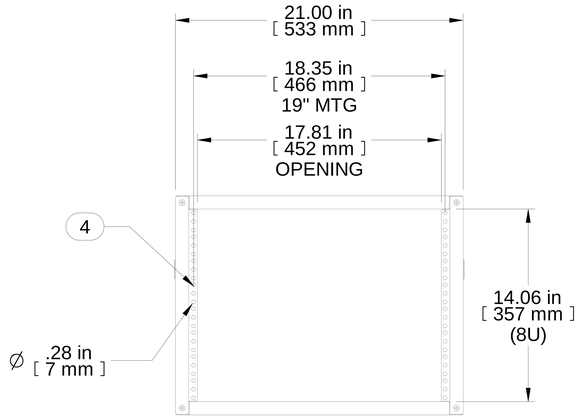

FRONT VIEW

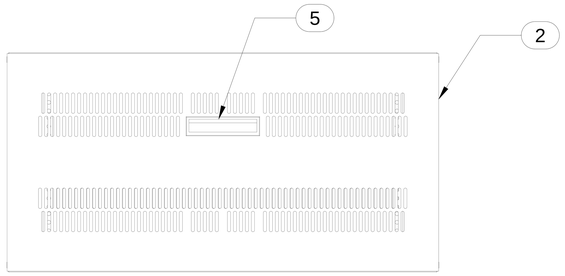

R.S. VIEW

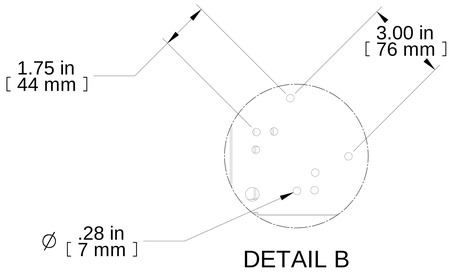

DETAIL B
2:1

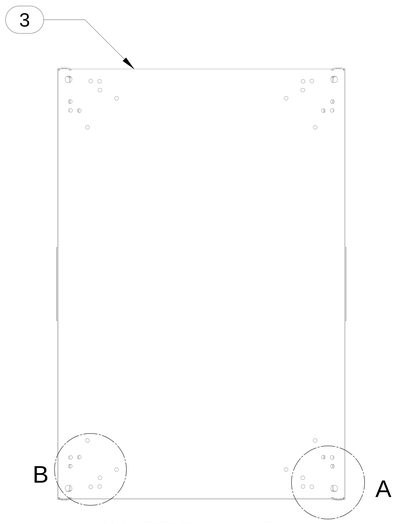

BOTTOM VIEW

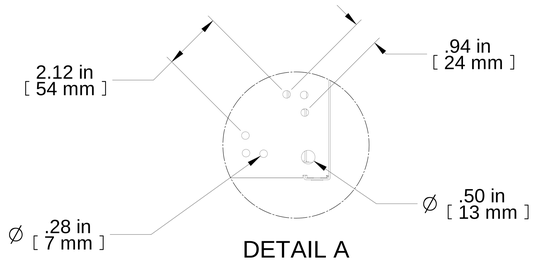

DETAIL A
2:1

Item Number	Title	Quantity
1	RCHS/V TOP PANEL ASM	1
2	RCHS K.D. - SIDE	2
3	RCHS/V BOTTOM PANEL ASM	1
4	RCHS K.D. - PUNCHED COMBO RAILS	4
5	BLACK PLASTIC HANDLE	2
6	SCREW 1/4-20X1/2 HEX SLOT BOLT	8
7	NUT 1/4-20 SPRING	8
8	SCREW M6 X 1.0 X 12MM	8

PART NUMBERS

RCHV1901431BK1 PAINTED BLACK TEXTURED

NOTES

Shipped knockdown for handing ease and protection.

Français

Pour tous les détails sur nos produits,
svp veuillez consulter notre site www.hammondmfg.com

Data subject to change without notice. Isometric drawing not to scale.
Les données sont sujettes à changement sans préavis.

HAMMOND MANUFACTURING®

www.hammondmfg.com

PART NO. RCHV1901431BK1