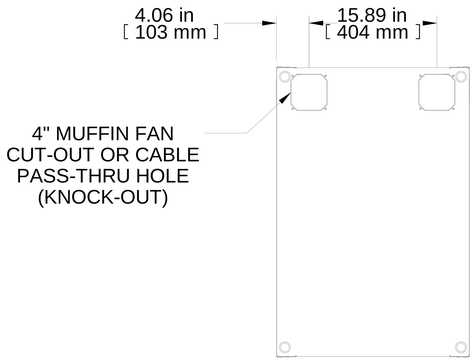

TOP VIEW

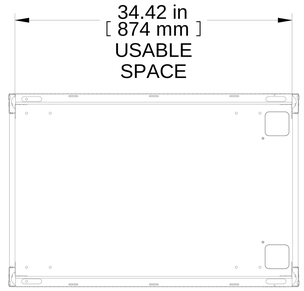

SECTION A-A

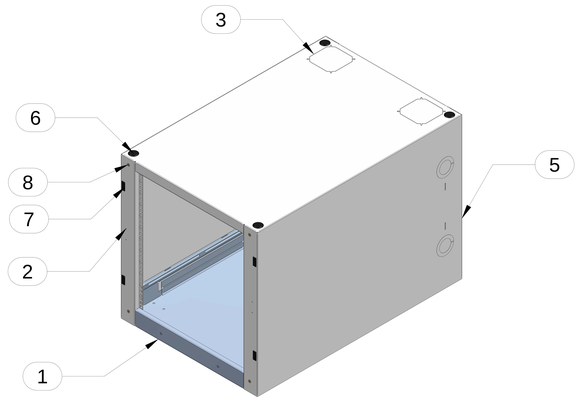

ISOMETRIC

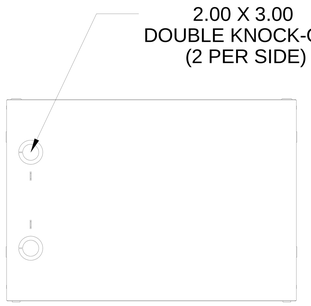

L.S. VIEW

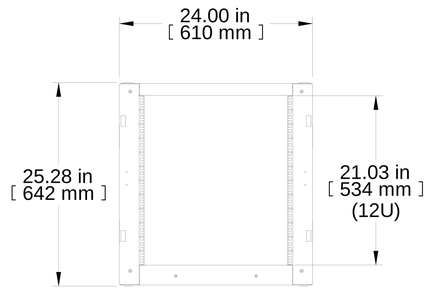

FRONT VIEW

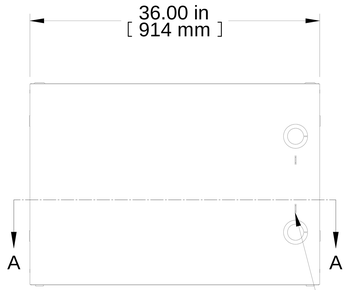

R.S. VIEW

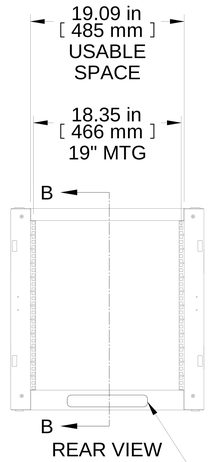

REAR VIEW

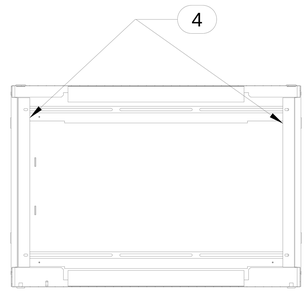

SECTION B-B

CABLE-TIE LANCE
(2 PER SIDE)

1.50 X 10.00
GLAND OPENING
(KNOCK-OUT)

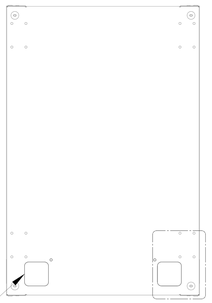

3" X 3" CABLE
PASS-THRU HOLE
(KNOCK-OUT)

BOTTOM VIEW

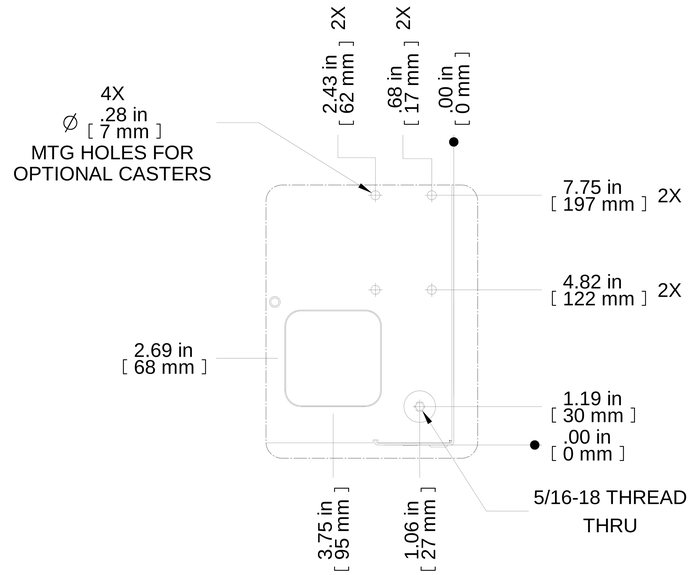

DETAIL C

Item Number	Title	Quantity
1	RCSC - BOTTOM PANEL	1
2	RCSC - LH SIDE FRAME	1
3	RCSC - TOP PANEL	1
4	RCSC - 12U PUNCHED PANEL RAIL	4
5	RCSC - RH SIDE FRAME	1
6	PLUG - 1.00" DIA. HOLE	4
7	PLUG - 0.38" X 1.13" CUTOUT	8
8	SCREW M6 X 1.0 X 12MM	8

PART NUMBERS

RCSC1902136BK1	PAINTED BLACK TEXTURED

NOTES

Shipped knockdown for handling ease and protection.

See Hammond Website for Additional Accessories.

Français

Pour tous les détails sur nos produits,
svp veuillez consulter notre site www.hammondmfg.com

Data subject to change without notice. Isometric drawing not to scale.
Les données sont sujettes à changement sans préavis.

HAMMOND MANUFACTURING®

www.hammondmfg.com

PART NO. **RCSC1902136BK1**