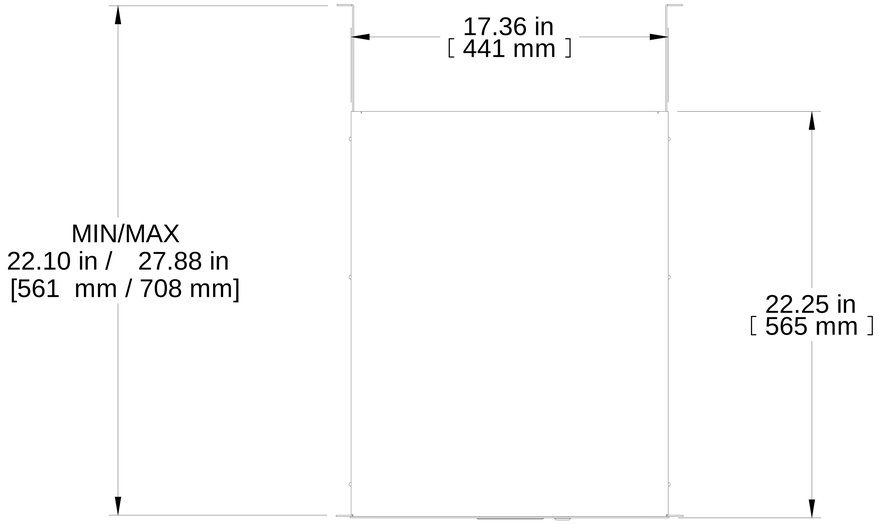


TOP VIEW

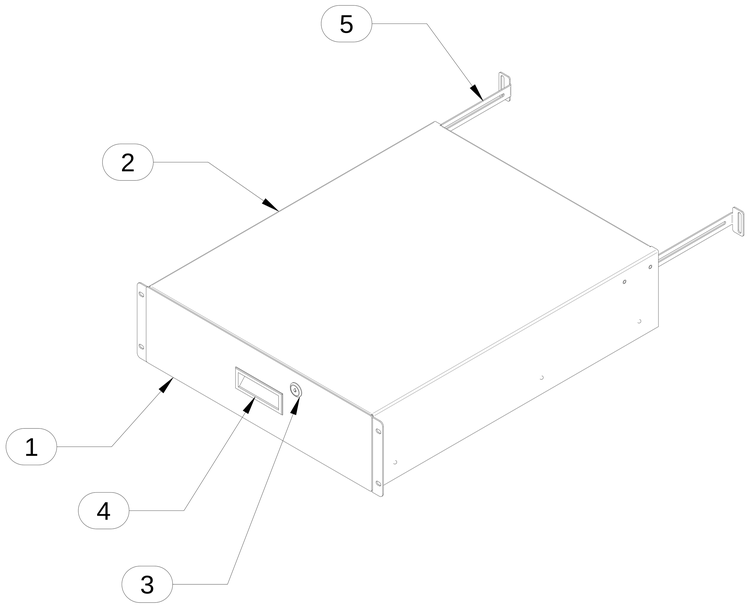

L.S. VIEW

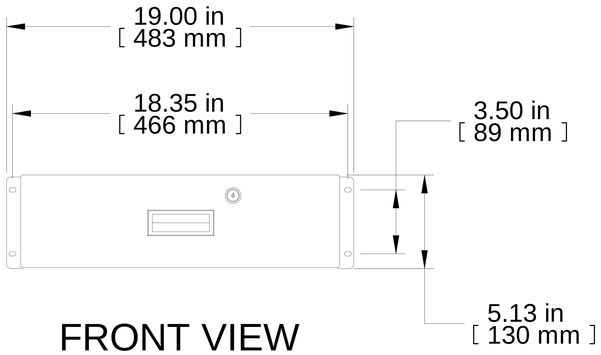


FRONT VIEW

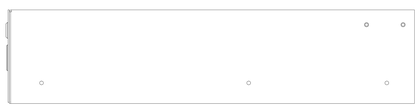

R.S. VIEW

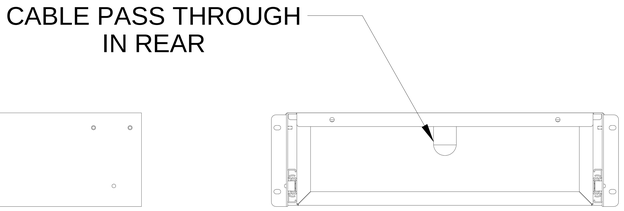


REAR VIEW

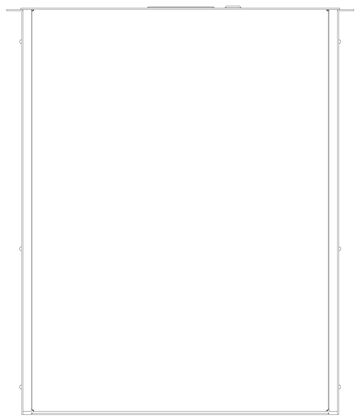

BOTTOM VIEW

| Item Number | Title | Quantity |
|---|---|---|
| 1 | RDRW - DRAWER BODY (1900522) | 1 |
| 2 | RDRW - SHROUD (1900522) | 1 |
| 3 | LOCK KEY-LOCK W/NUT 7.5MM | 1 |
| 4 | PLASTIC HANDLE | 1 |
| 5 | RDRW - REAR MOUNTING BRACKET | 2 |

**PART NUMBERS**

RDRW1900522

**NOTES**

Rear Support Brackets Included
Mounting Hardware Not Included
See Hammond Website for More Information

**Français**

Pour tous les détails sur nos produits,
svp veuillez consulter notre site www.hammondmfg.com

Data subject to change without notice. Isometric drawing not to scale.
Les données sont sujettes à changement sans préavis.

HAMMOND MANUFACTURING®

www.hammondmfg.com

**PART NO.** **RDRW1900522BK1**