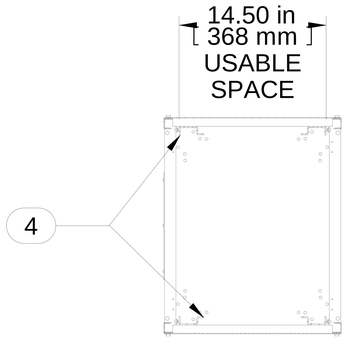

SECTION B-B

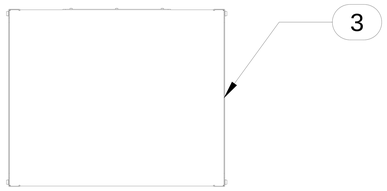

TOP VIEW

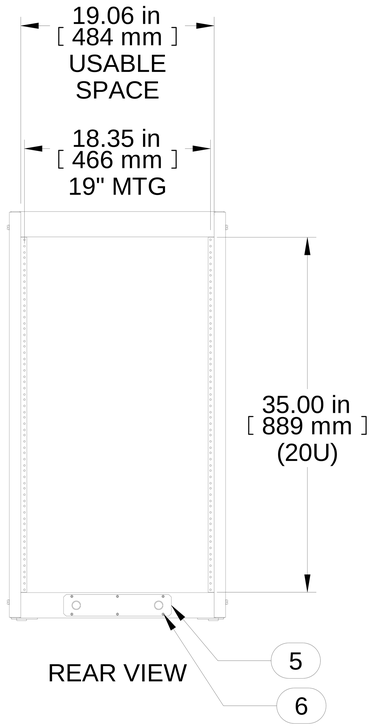

REAR VIEW

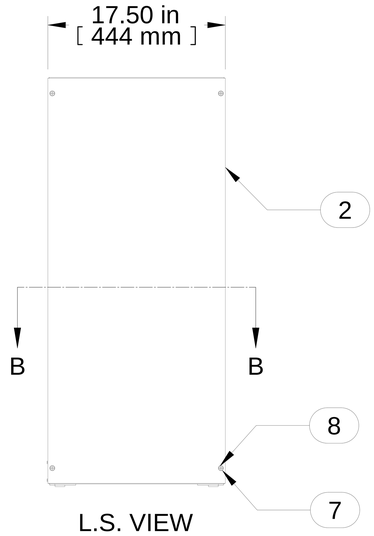

L.S. VIEW

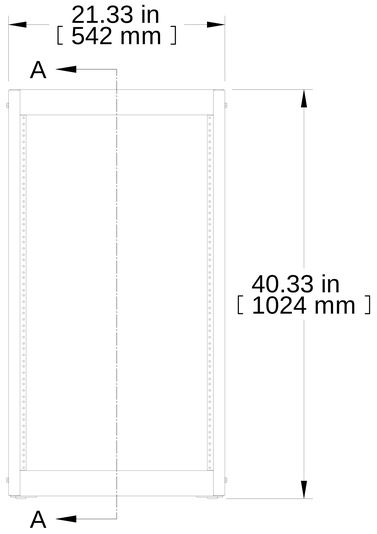

FRONT VIEW

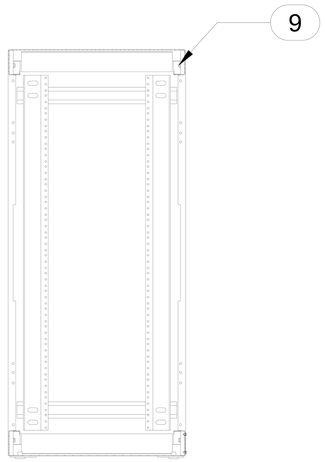

SECTION A-A

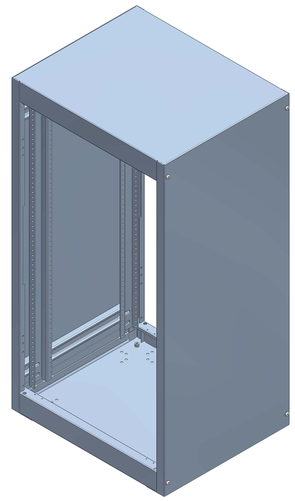

ISOMETRIC

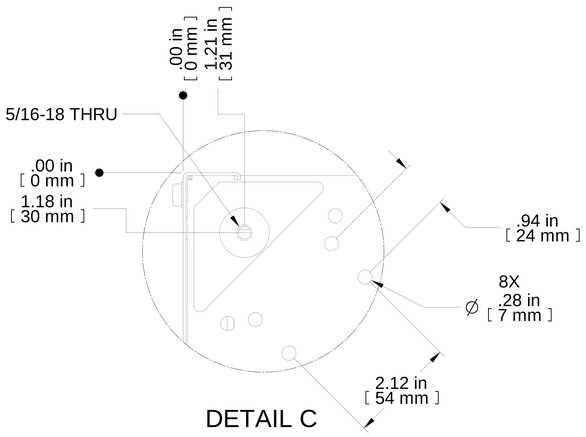

DETAIL C

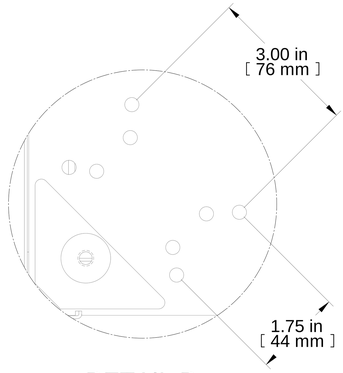

DETAIL D

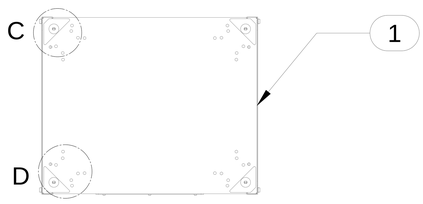

BOTTOM VIEW

Item Number	Title	Quantity
1	REFK - BOTTOM PANEL	1
2	REFK - SIDE PANEL	2
3	REFK - TOP PANEL	1
4	COMBINATION RAILS TAPPED (PAIR)	2
5	REFK - GLAND PLATE	1
6	SCREW 6-32X1/4 SELF TAPPING	6
7	FLAT NYLON WASHER 1/4" I.D.	8
8	SCREW 1/4-20 X 1/2	8
9	NUT 1/4-20 KEP	8

PART NUMBERS

REFK1903517BK1	PAINTED BLACK TEXTURED
REFK1903517LG1	PAINTED RAL7035 TEXTURED

NOTES

Shipped Knockdown for handling ease and protection.

Français

Pour tous les détails sur nos produits,
svp veuillez consulter notre site www.hammondmfg.com

Data subject to change without notice. Isometric drawing not to scale.
Les données sont sujettes à changement sans préavis.

HAMMOND MANUFACTURING®

www.hammondmfg.com

PART NO. **REFK1903517**