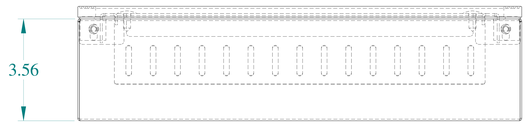

TOP VIEW

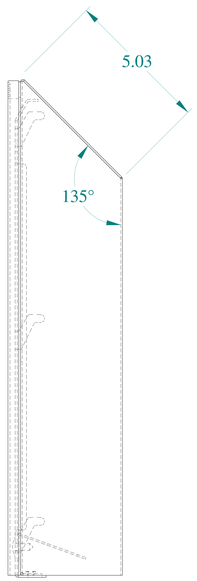

SIDE VIEW

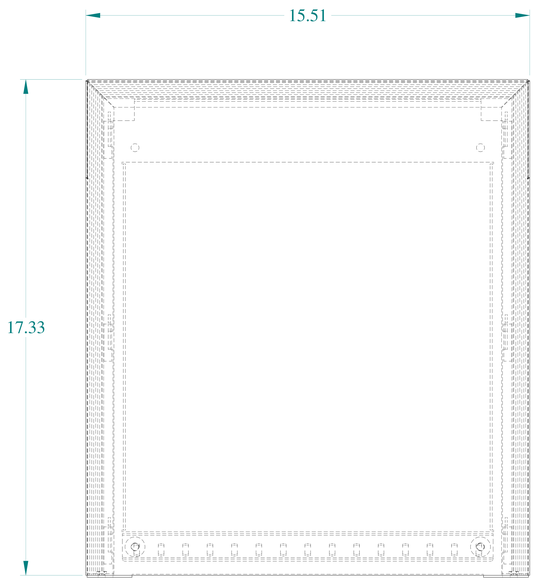

FRONT VIEW

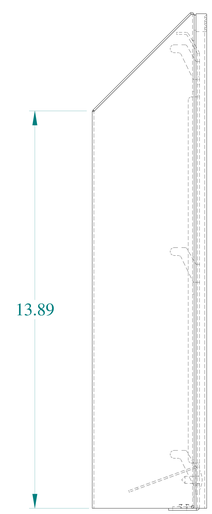

SIDE VIEW

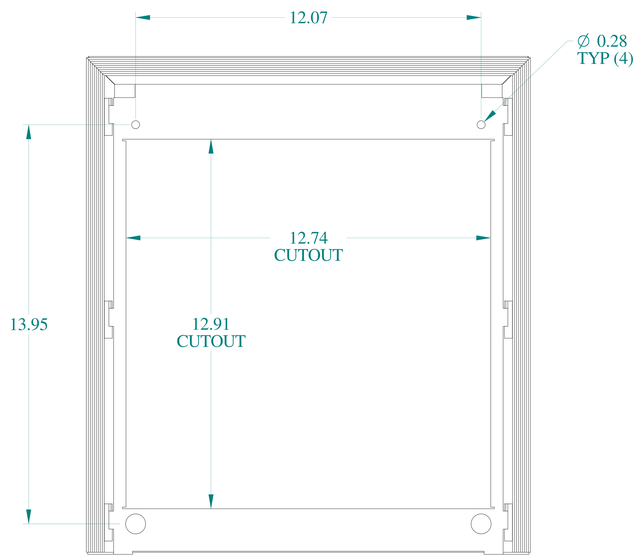

BACK VIEW

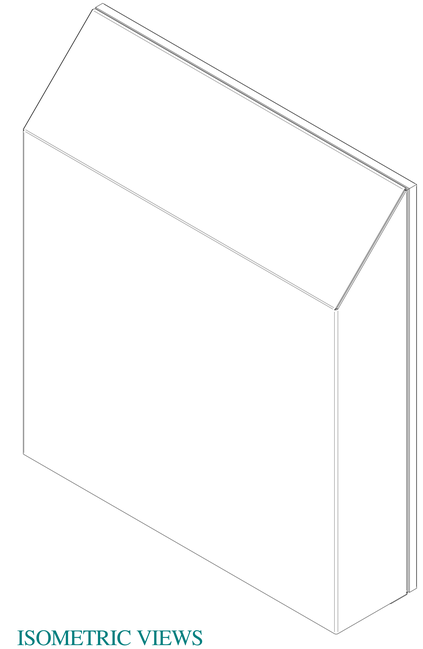

ISOMETRIC VIEWS

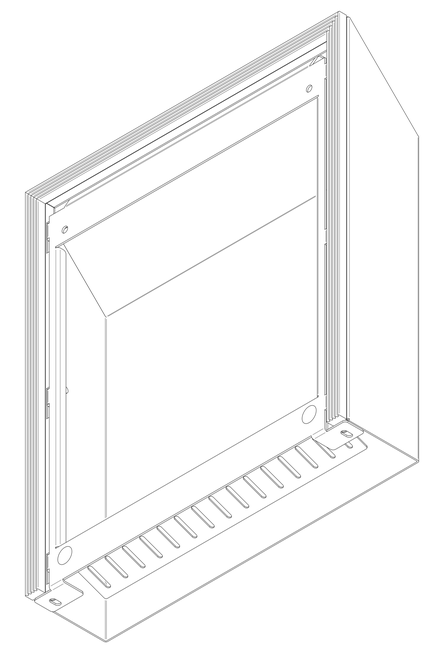

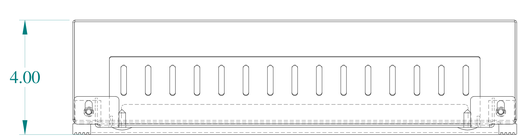

BOTTOM VIEW

HAMMOND MANUFACTURING®

www.hammondmfg.com

Data subject to change without notice.

Part # : RH60000N4SSFDA	Date : Aug 8, 2019

Link:www.hammfg.com/RH60000N4SSFDA