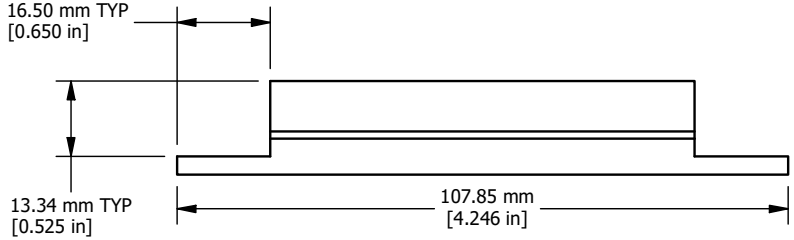

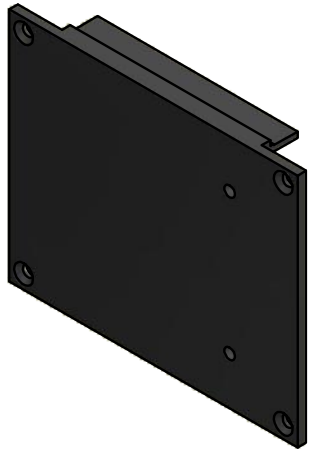

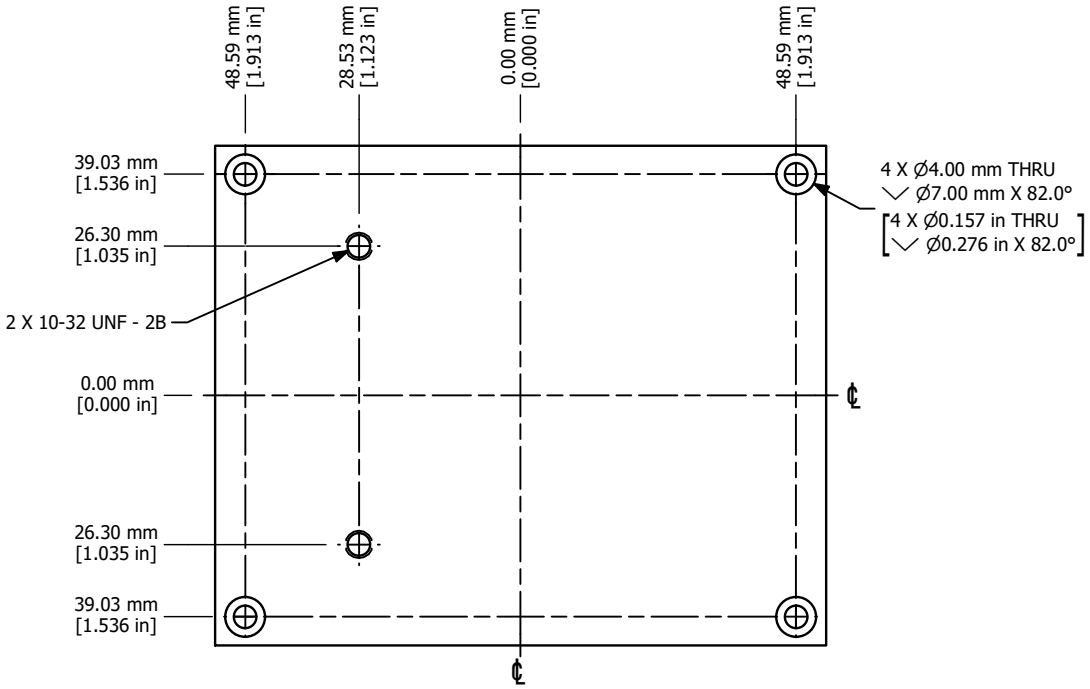

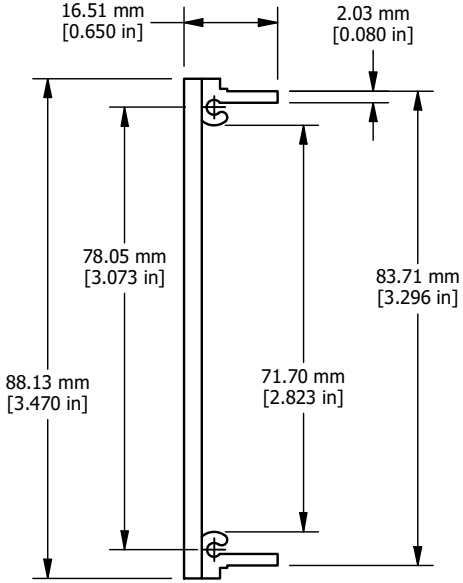

RM2U04BKSP
Material - Extruded 6063 Aluminum
Finish - Black Textured Powder Paint

HAMMOND MANUFACTURING™

RM2U04BKSP

www.hammondmfg.com