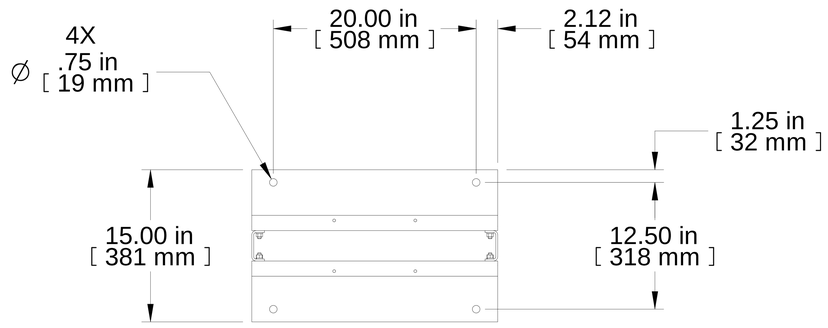

TOP VIEW

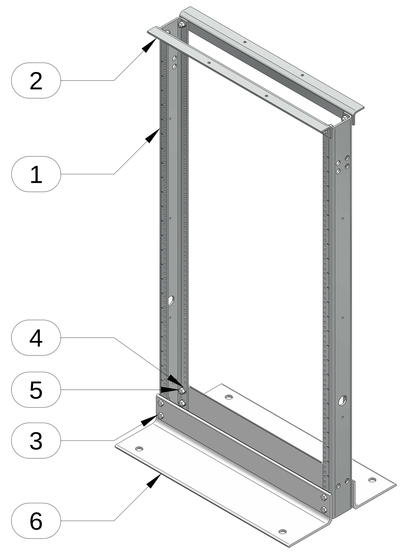

ISOMETRIC

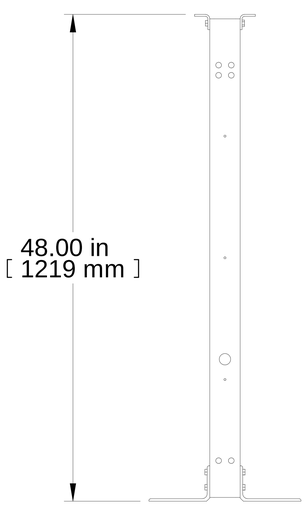

L.S. VIEW

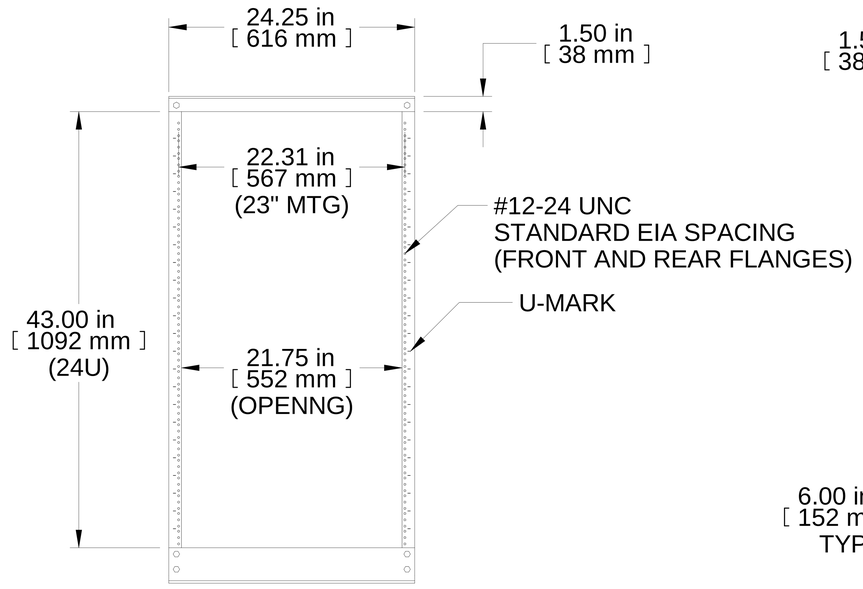

FRONT VIEW

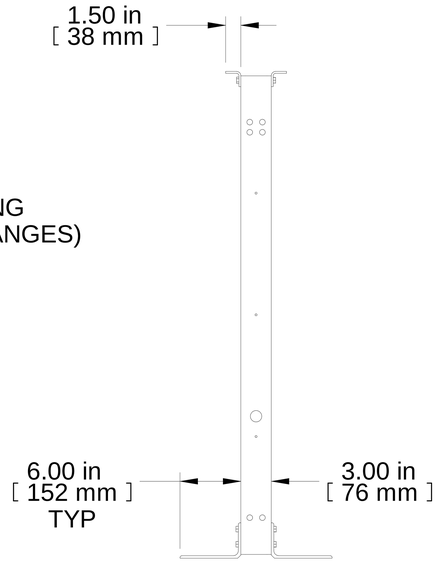

R.S. VIEW

BOTTOM VIEW

Item Number	Title	Quantity
1	RRAL - RAIL	2
2	RRAL - TOP ANGLE	2
3	SCREW 3/8-16 X 1	12
4	WASHER 3/8 SPLIT	12
5	NUT 3/8-16 HEX	12
6	RRAL - BASE ANGLE	2

PART NUMBERS

RRAL2348 NATURAL FINISH

NOTES

Shipped knock-down for handling ease and protection

See Hammond Website for Additional Accessories

Français

Pour tous les détails sur nos produits,
svp veuillez consulter notre site www.hammondmfg.com

Data subject to change without notice. Isometric drawing not to scale.
Les données sont sujettes à changement sans préavis.

HAMMOND MANUFACTURING®

www.hammondmfg.com

PART NO. **RRAL2348**