ASSEMBLED VIEW

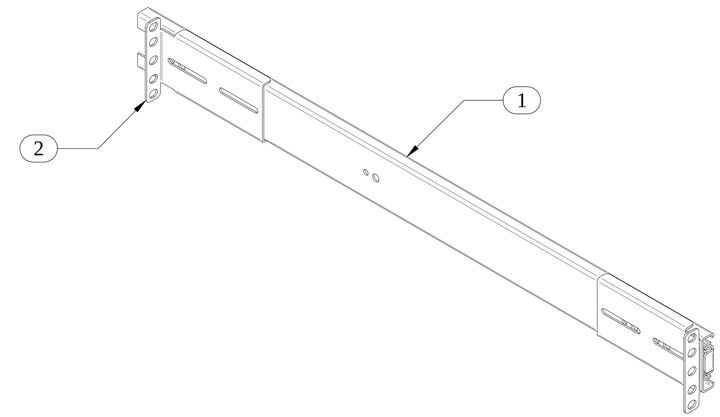

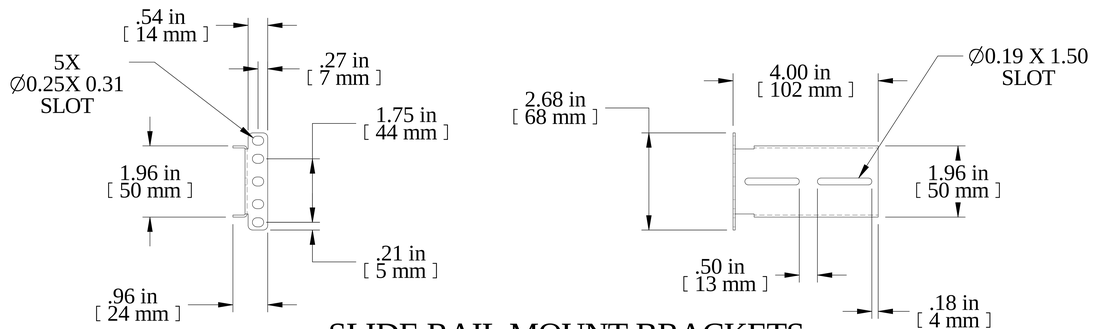

SLIDE RAIL MOUNT BRACKETS

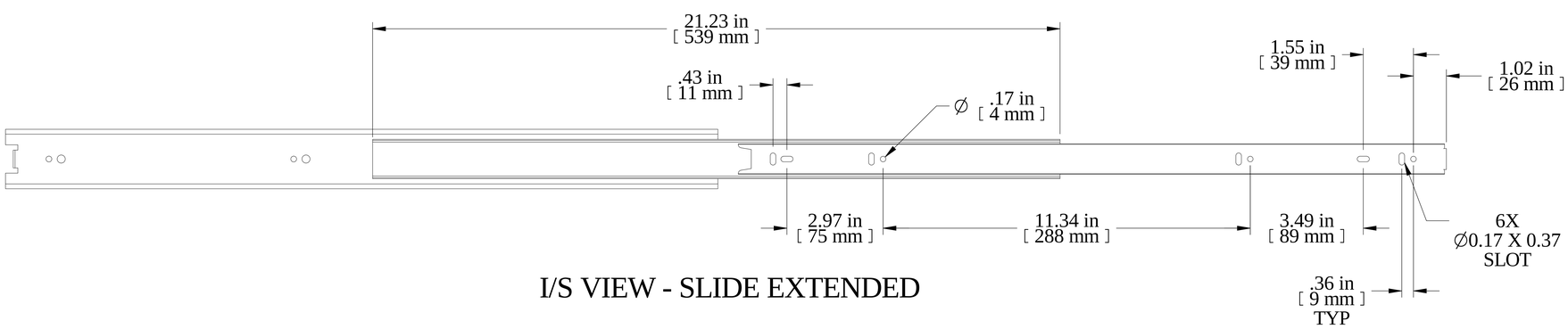

I/S VIEW - SLIDE EXTENDED

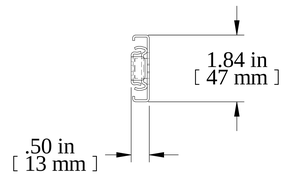

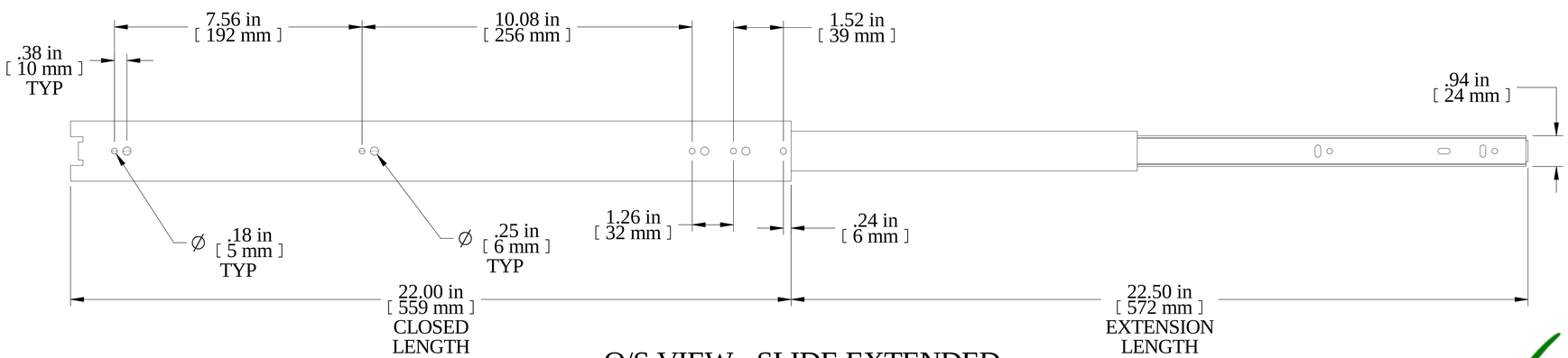

O/S VIEW - SLIDE EXTENDED

RoHS

Item Number	Document Number	Title	Quantity
1	SLD20007	SLIDE 22" FULL TRAVEL	1
2	BKT86689	SLIDE MTG BRACKET	2

PART NUMBERS

RSLIDE22	Zinc Plate Finish

NOTES

Slides Sold In Pairs
Includes: Assembly Hardware, 2 Slides, 4 Mounting Brackets
Some Assembly Required
Rack Mounting Hardware Not Included

Français

Pour tous les détails sur nos produits,
svp veuillez consulter notre site www.hammondmfg.com

Data subject to change without notice. Isometric drawing not to scale.
Les données sont sujettes à changement sans préavis.

HAMMOND MANUFACTURING®

www.hammondmfg.com

PART NO. **RSLIDE22**