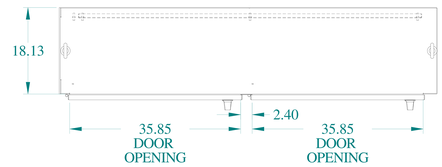

TOP VIEW

ISOMETRIC VIEWS

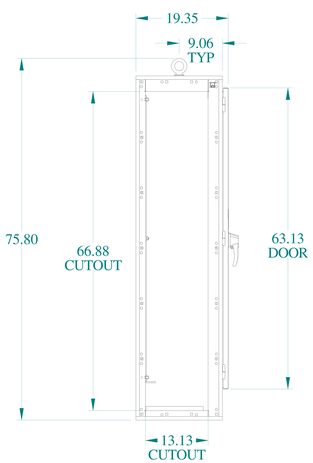

SIDE VIEW

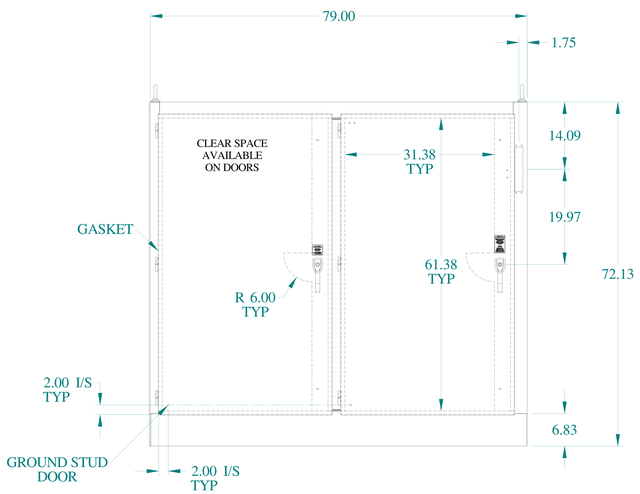

FRONT VIEW

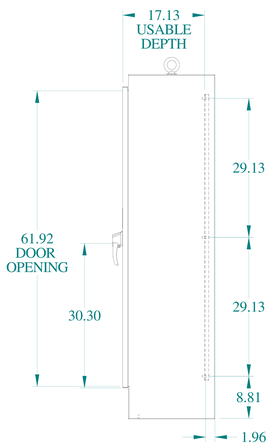

SIDE VIEW

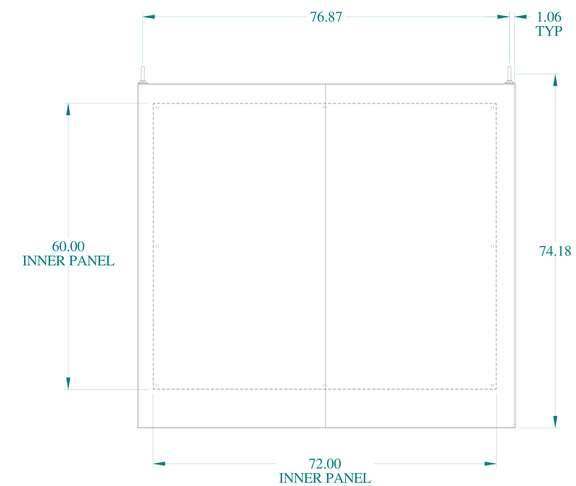

BACK VIEW

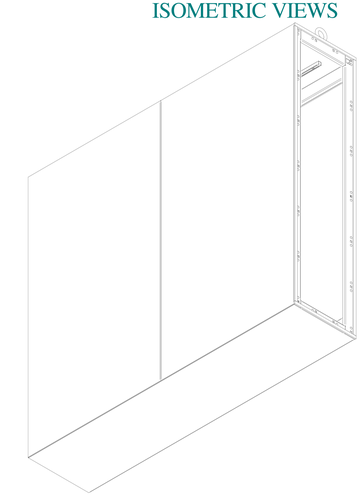

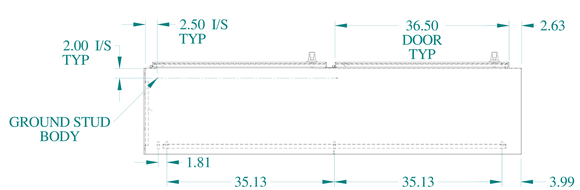

BOTTOM VIEW

HAMMOND MANUFACTURING®

www.hammondmfg.com

Data subject to change without notice.

Part # : UHDM727918MFTC	Date : Mar. 23, 2019

Link:www.hammfg.com/UHDM727918MFTC